EN

Enabling Switches
ZS

EUCHNER
More than safety.

EUCHNER

More than safety.

Headquarters in Leinfelden-Echterdingen

Logistics center in Leinfelden-Echterdingen

Production location in Unterböhringen

Internationally successful – the EUCHNER company

EUCHNER GmbH + Co. KG is a world-leading company in the area of industrial safety technology. EUCHNER has been developing and producing high-quality switching systems for mechanical and systems engineering for more than 50 years.
The medium-sized family-operated company based in Leinfelden, Germany, employs more than 500 people around the world, 400 in Germany alone.

In addition to the production locations in Unterböhringen and Shanghai/China, 14 subsidiaries and other sales partners in Germany and abroad work for our international success on the market.

Quality and innovation – the EUCHNER products

A look into the past shows EUCHNER to be a company with a great inventive spirit. We take the technological and ecological challenges of the future as an incentive for extraordinary product developments.

EUCHNER safety switches monitor safety doors on machines and installations, help to minimize dangers and risks and thereby reliably protect people and processes. Today, our products range from electromechanical and electronic components to intelligent integrated safety solutions. Safety for people, machines and products is one of our dominant themes.

We define future safety technology with the highest quality standards and reliable technology. Extraordinary solutions ensure the great satisfaction of our customers. The product ranges are subdivided as follows:

- Transponder-coded Safety Switches (CES)
- Transponder-coded Safety Switches with guard locking (CET)
- Interlocking and guard locking systems (Multifunctional Gate Box MGB)
- Access management systems (Electronic-Key-System EKS)
- Electromechanical Safety Switches
- Magnetically coded Safety Switches (CMS)
- Enabling Switches
- Safety Relays
- Emergency Stop Devices
- Hand-Held Pendant Stations and Handwheels
- Safety Switches with AS-Interface
- Joystick Switches
- Position Switches

made in Germany

Contents

Enabling switches

General **4**
About this catalog 4
Standards and approvals 5
Function and technology used in enabling switches 5

Built-in enabling switches ZSE/ZXE **9**

Enabling switch ZSM **13**

Enabling switches ZSA/ZSB/ZSR **31**
Enabling switches ZSA (housing G1) 32
Enabling switches ZSB with additional buttons and LEDs (housing G1) 39
Enabling switches ZSR (housing G2) 42
Enabling switches ZSB with additional buttons and LEDs (housing G3) 44

Enabling devices ZSG/ZSA **49**
Built-in enabling device ZSG 50
Enabling devices ZSA (housing G1) 51

Kits **53**
Kit for enabling switches ZSM 54
Kit for enabling switches ZSA (housing G1) 59
Kit for enabling device ZSA (housing G1) 61

Accessories **63**
Holders and components 64
Plug connectors and cables 66

Technical data **71**
Wiring diagrams for enabling switches ZSM 72
Technical data for enabling switches ZSM 79
Technical data for enabling switches ZSE/ZXE/ZSA/ZSB/ZSR 81
Technical data, accessories for enabling switches 85

Item index **87**
Index by item designation 87
Index by order numbers 89

About this catalog

The Enabling Switch ZS catalog provides an overview of our two-stage enabling devices and three-stage enabling switches. Due to their robust and ergonomic design, these switches are the right choice for numerous applications.

You will find the technical data after the product overview. There is a reference to the page with the related technical data on the pages listing the products.
At the front of the catalog you will find useful information on the topic of enabling switches.

You will find the following series and accessories in this catalog:

Enabling switches, 3-stage					
Enabling switches for building in	Hand-held enabling switches				Accessories
ZSG, ZSE and ZXE	in housing ZSM or as kit	in housing G1 or as kit	in housing G1, G3	in housing G2	
ZSE ZXE	ZSM	ZSA G1	ZSB G1 G3	ZSR G2	Cables, plug connectors, holders, blanking covers

Enabling devices, 2-stage	
Enabling devices for building in	Hand-held enabling devices
ZSG ZSG	in housing G1 or as kit
	ZSA G1

Subject to technical modifications; no responsibility is accepted for the accuracy of this information.

Standards and approvals

Standards

Enabling switches that are integrated into safety circuits have a safety function. For this reason they are assessed based on the Machinery Directive and the European standards. The Machinery Directive has been implemented in national law in the EU member states and, as a result, is binding for all manufacturers.
Detailed requirements for switches are defined in EN 60947 Part 5-1 (Specification for low-voltage switchgear and controlgear. Part 5-1: Control circuit devices and switching elements. Electromechanical control circuit devices).
If the requirements of these standards are met, conformity with the applicable laws and therefore with the Machinery Directive is assumed. EUCHNER enabling switches comply with the relevant standards for safety switchgear and therefore help you to comply with safety requirements during the design of your machinery.

User standards

As a user, you should take into consideration the following standards of relevance for enabling switches:

European and international standards

standard	Title
EN 60 204	Safety of machinery. Electrical equipment of machines
EN 775/ EN ISO 10218	Robots for industrial environments - safety requirements (ISO 10218:1992, modified)
VDI 2853	Sicherheitstechnische Anforderungen an Bau, Ausrüstung und Betrieb von Industrierobotern [Safety related requirements on design, configuration and operation of industrial robots] (withdrawn)
VDI 2854	Sicherheitstechnische Anforderungen an automatisierte Fertigungssysteme (Safety related requirements on automated manufacturing systems)

American standards

standard	Title
ANSI B11-TR3-2000	Risk Assessment and Risk Reduction - A Guide to Estimate, Evaluate and Reduce Risks Associated with Machine Tools
NFPA 79 (2002)	Electrical Standard for Industrial Machinery
OSHA 29 CFR 1910 Subpart O Subpart P Subpart S	 Machinery and Machine Guarding Hand and Portable Power Tools and Other Hand-Held Equipment Electrical

Please also observe any existing C standards!

Approvals

To demonstrate conformity, the Machinery Directive also includes the possibility of type examination. In addition to taking into account all relevant standards, EUCHNER commissions type examinations by a notified body. Many of the enabling switches listed in this catalog have been tested by an employers' liability insurance association (BG) and are given in the lists from the BG.
Furthermore, many enabling switches are listed by the Underwriters Laboratories (UL) and the Canadian Standards Association (CSA). These enabling switches can be used in countries in which this listing is required. The approval symbols on the individual pages of the catalog indicate which body tested the enabling switches.
With the aid of the approval symbols listed below you can quickly see which approvals are available for the related enabling switches:

DGUV Test IT Sicherheit geprüft tested safety	Switches with this symbol have the approval of the German Social Accident Insurance association (DGUV) – formerly the employers' liability insurance association (BG).
c UL us LISTED	Switches with this symbol are approved by Underwriters Laboratories (UL, Canada and USA)

Function and technology used in enabling switches

Task of enabling switches

Enabling switches are manually operated control devices that, together with other control switches, enable commands related to potentially hazardous conditions to be run, as long as the enabling switches are actuated continuously.
These switches are used wherever personnel must work directly in the danger area on machines and systems. This is necessary, e.g. during setting up, programming, testing or servicing work. As per annex 1 of the Machinery Directive, the protective action of movable safety guards can be disabled in these operating modes. The Machinery Directive places the condition that these operating modes must be secured using a lockable device (e.g. key-operated rotary switch) and machine operation is only allowed to be triggered by a second, separate action.
To enable the operator in the danger area of a machine to trigger a machine movement, an enabling device must also be actuated. The operator must also be able to stop the machine movement using the enabling device. This task is performed by the enabling switch.
Every person who is in the hazardous area must carry an enabling device so that suitable action can be taken in case of danger.

Two-stage enabling device or three-stage enabling switch?

The operator can only start a machine movement if he/she actuates the enabling device and keeps it in the actuated position. The movement is stopped again when the switch is released. This two-stage function (OFF-ON) is provided by all enabling switches.
However, experience shows that the operator often clenches the enabling device in an emergency.
In this case a three-stage enabling switch is better and is specifically requested in many C standards. This switch has three switch positions (OFF-ON-OFF) and, if the operator clenches the switch, it is actuated beyond the enabling position (middle position) and the machine is shut down as a result.
If a 2-stage enabling device is used, it must also be ensured that, in an emergency, the operator is in a position to activate an emergency stop device in close proximity (VDI 2853). To identify the type of enabling switch in the catalog, the following symbols are used:

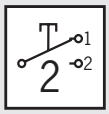

Symbol for a
2-stage enabling device

Symbol for a
3-stage enabling device

Large selection of switching elements

To be able to cover as many applications as possible, EUCHNER enabling switches can be fitted with various switching elements of single-channel or dual-channel design. Auxiliary contacts are also available, as are additional switches or displays.

Positively driven contacts

Positively driven contacts are used in many switching elements. These are special switching contacts that are designed to ensure the switching contacts are always reliably separated. Even if contacts are welded together, the connection is opened by the actuating force.

Function sequence of two-stage enabling device

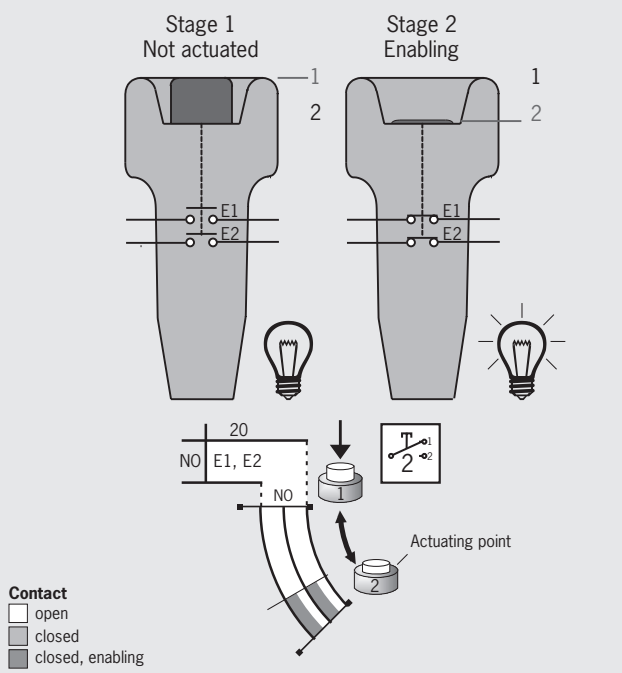

2-stage enabling device

Function sequence of three-stage enabling switch

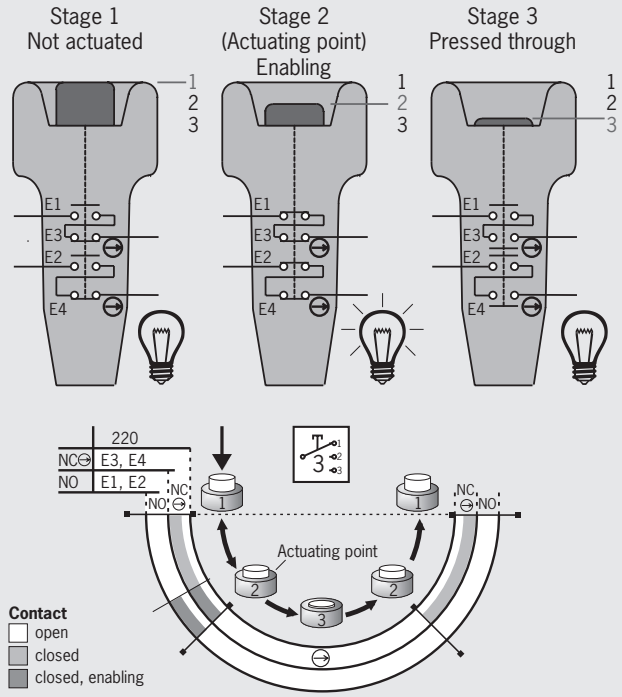

3-stage enabling switch

As can be clearly seen in the figure, the enabling function can only be achieved at stage 2. This function is provided by the closing of the normally open contacts (NO = E1 and E2).
If the button is released, that is back from stage 2 to stage 1, the normally open contacts are opened again. The 2-stage enabling devices and 3-stage enabling switches are identical in this function.

If, in this example, the button on a 3-stage enabling switch is pressed past the actuating point (stage 2) in panic (to stage 3), then not only the normally open contacts (NO⊖) are reset, but also the safe positively driven contacts.
The patented switch system ensures that the enabling function does not become active at stage 2 on the resetting of the pushbutton from stage 3 to stage 1. In this example the enable can only be given if normally open and positively driven contacts are closed at the same time. This situation is only possible on actuation from stage 1 to stage 2. In the other direction, from stage 3 to stage 1, stage 2 is skipped and unintentional re-starting prevented.
Once the pushbutton has reached stage 1, the function sequence can be started again.
Due to its design, the switch unit also provides a wear-free, constant actuating point (stage 2).

Reading travel diagrams and wiring diagrams

For each of the switching elements used, there is a travel diagram which, dependent of the enabling switch's switch stage, shows the switching states.
The following example is intended to explain these aspects:

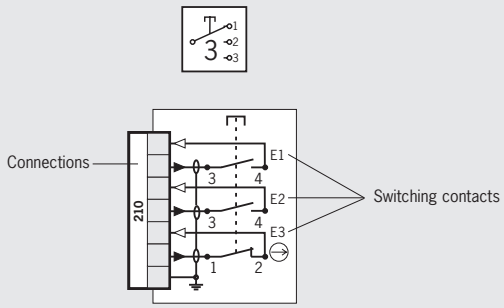

Wiring diagram for switching element 210

The wiring diagram shows the switching element in the free position (enabling switch not actuated).
The switching element 210 has three switching contacts (E1, E2 and E3).
The switching contact E3 is designed as a positively driven contact, the other two switching contacts as normally open contacts.

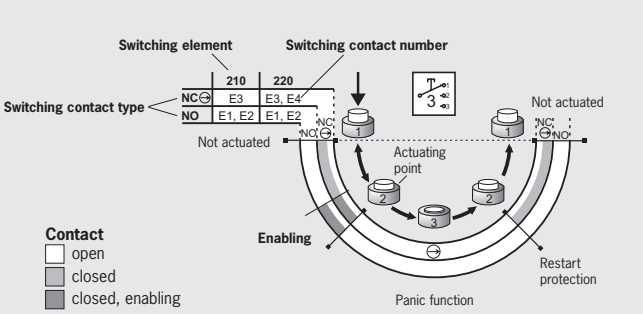

Travel diagram for switching element 210

As in this example, in some cases several switching elements are combined in one travel diagram. Here, along with the switching element 210 with the switching contacts E1, E2 and E3, there is also the switching element 220 with the switching contacts E1 to E4.
The letters on the left beside the switching contact E3 define the switching contact type, in this case a positively driven contact (NC ⊖).

Subject to technical modifications; no responsibility is accepted for the accuracy of this information.

The following switching contact types are available:

- NO normally open contact
- NC normally closed contact
- NC ⊖ positively driven contact
- NO/NC three-point switch
  (3-stage switching contact with normally open/normally closed function; switching stage dependent on the actuation travel)
- NO/NC ⊖ three-point switch
  (like NO/NC but with positively driven contact)

The travel diagram shows the switching state of each switching contact for the three switch stages "Not actuated", "Enabling" and "Panic function" (pressed past actuating point). Gray areas mean "switch closed", white areas mean "switch open".

In the example for switching element 210 the sequence is as follows:

- In the not actuated state, the positively driven contact E3 is closed (gray area) and the two normally open contacts E1 and E2 are open.
- When the switch has reached stage 2, the normally open contacts E1 and E2 are closed, E3 remains closed. This is the enabling area.
- If the switch is released, the switching contacts return to their initial state.
- If the switch is pressed beyond the enabling area, all switching contacts are opened. This is the "panic function" area on the travel diagram.
- If the switch is now released again, the positively driven contact E3 is closed again, the switch system prevents the normally open contacts E1 and E2 closing again at the same time (restart protection).

An optimal sequence is provided by the series connection of E1 (normally open contact) and E3 (positively driven contact), as then enabling is only possible at the actuating point. On pressing through to stage 3, the safe positively driven contact opens the safety circuit. On this switching element E2 can be used as an auxiliary contact or 2nd channel.

Single-channel and dual-channel enabling switches

Often two positively driven contacts and normally open contacts are employed to increase safety using the principle of duplicated design (redundancy). This dual-channel design ensures that on the failure of one channel or on a fault in the control circuit (e.g. in the machine wiring), the safety function can still be provided with the aid of the second channel. An example is given in the wiring diagram for switching element 220:

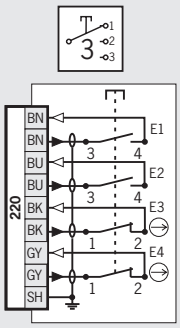

Wiring diagram for switching element 220

The normally open contact E1 and the positively driven contact E3 as well as the normally open contact E2 and the positively driven contact E4 can be connected externally in series. In this way a dual-channel design is achieved.

Safety in case of faults

Along with the possibility of using positively driven contacts and the possible dual-channel layout of the design, the patented connection cables from EUCHNER provide additional protection on the occurrence of faults. Not only the outer screening of the cable, but also the individual screening of the cores enables, e.g. short circuits or cable breaks due to crushing, to be detected by a control system.

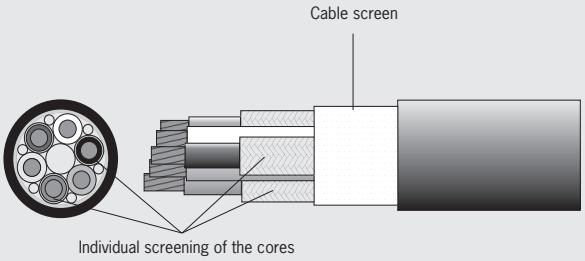

Layout of connection cables

Protection against tampering

An enabling switch can only ensure that operation is free of hazards if it is not bypassed. To prevent tampering, our enabling switches are designed such that it is more difficult to bypass the safety function. The best tampering protection is, however, acceptance with the user.

Ergonomics

To achieve the related user acceptance of a manually operated control, the focus of EUCHNER enabling switches is on safe and balanced handling, even over extended periods (e.g. when observing manufacturing processes). Enabling switches manufactured by EUCHNER have a low weight, an ergonomic housing design and a light, stable actuating point. Both thumb-actuated switches and switches that can be actuated with several fingers in order to maintain the actuating force over an extended period are used.
By selecting a coiled cable with long cable ends, the weight of the switch is reduced as the heavy, spiral part of the cable lies on the floor and only the lighter, straight part needs to be held by the user.

Enabling switches for building in

The enabling devices in series ZSG and the enabling switches in series ZSE and ZXE can be integrated into any housings or control panels. As a result every customer can prepare a customized solution to suit his/her specific application.

Kits for enabling switches

Using enabling switch kits from EUCHNER you can assemble your own customized enabling switch ideally matched to your requirements.
The kit is available for the housing G1 as a two or three-stage version and for the ZSM as a three-stage version. Various switching elements are available.

Hand-held enabling switches

The enabling switches in the series ZSM, ZSA, ZSB and ZSR are installed in a housing and are already pre-wired. Depending on version, the hand-held enabling switches feature protection class IP 67 or IP 65. In addition to the enabling function, EUCHNER enabling switches can be equipped with further command buttons (pushbutton, selector switch, key-operated rotary switch or emergency stop device) and LED displays. In this way work processes, such as axis selection and the movement of axes, can be performed directly at the machine using the enabling switch.

Electrical connection

Different cable lengths and cable types are available for the connection of the pre-assembled hand-held enabling switches.
Modern wiring concepts increasingly utilize plug-in connections. The enabling switch does not need to remain permanently connected, but is plugged in as required.
Furthermore, a switch with plug connectors can be easily replaced during servicing work. This configuration results in short downtimes.
The enabling switches ZSM, ZSA, ZSB and ZSR are available with various plug connectors. In addition to the related mating connectors, further accessories are available.

Marking of switching elements

The switching elements used in our enabling switches have a numbering system. A selection of switching elements is available depending on the series.

Explanation of symbols and notation

Symbols and specific notation related to the switches or the switching contact are used time and again in the catalog. The following example is intended to explain these aspects:

Notation
1 NC ⊖ + 1 NO

Explanation
Normally closed contacts are represented by NC, normally open contacts by NO. The number defines how many contacts are available. The symbol after the NC defines that the NC contact is a positively driven contact. This switch therefore has one normally closed contact and one normally open contact; the normally closed contact is a positively driven contact.

Acknowledgment of enabling

Vibration signal
The ZSM enabling switch is optionally equipped with a vibration motor. This permits acknowledgment of enabling, e.g. in a loud environment. The signal pulsates, similar to the vibration signal of cellular telephones.

LED
An LED can also be optionally used as visual acknowledgment. Several products are equipped accordingly.

Emergency stop/machine stop
All emergency-stop devices with red pushbutton must be active in the danger area. Since a plugged connection could be unplugged in certain circumstances, enabling switches with plug connectors are equipped only with a black/yellow machine stop. Otherwise, it must be ensured that confusion between effective and ineffective devices is ruled out.

Subject to technical modifications; no responsibility is accepted for the accuracy of this information.

Selection table for built-in enabling switches ZSE and ZXE

Design

E	Built-in version (without cable)

Function

3	3-stage (OFF - enabling - OFF)

Connection

C	Tab connector, screw terminal, flying lead

Enabling switch ZXE

Enabling switch ZSE

Design E	Stages 3	Connection C	Page
●	●	●	10 - 12

Built-in enabling switches ZSE and ZXE

- **3-stage function**
- **Dual-channel version**
- **Optionally with 22.5 mm or 30.5 mm installation dimension**
- **Suitable, e.g., for installation in the hand-held pendant stations HBL or housing G2 or G3**

3-stage function
Enabling function is only active in the second stage (middle position, actuating point). If the button is released or pushed further (panic function), the enabling is removed (dependent on the wiring, see function sequence).

Hand-held pendant station HBL
See catalog for hand-held pendant stations.

Switching elements (see also page 8)
- **111** 1 NO + 1 NC ⊖ + 1 NC
- **121** 1 NO + 2 NC ⊖ + 1 NC
- **210** 2 NO + 1 NC ⊖
- **220** 2 NO + 2 NC ⊖
- **2202** 2 NO/NC [1)]

ZSE, 3-stage function
Tab connector

Dimension drawings

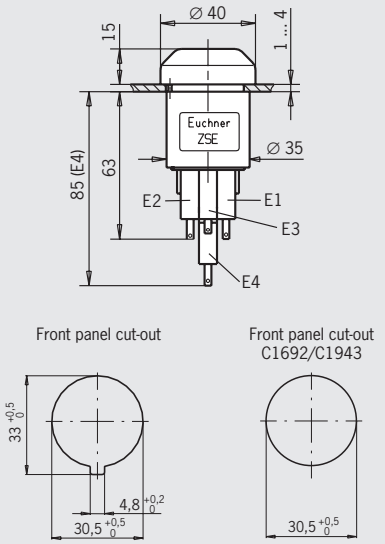

Wiring diagrams/function sequence

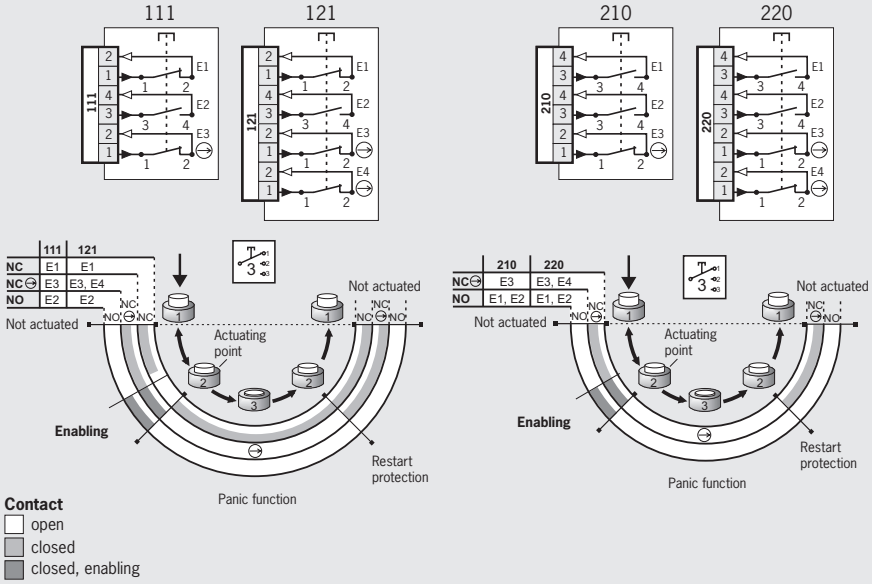

Ordering table

Design	Connection	Version	Switching element				
			111: 1 NO+1 NC ⊖ +1NC	**121**: 1 NO+2 NC ⊖ +1 NC	**210**: 2 NO+1 NC ⊖	**220**: 2 NO+2 NC ⊖	**2202**: 2 NO/NC[1)]
Built-in 3-stage **ZSE**	**Tab connector**		**052448** ZSE2-1	**070782** ZSE2-3	**052449** ZSE2-2	**070762** ZSE2-4	On request
		Suitable, e.g., for hand-held pendant stations HBL	On request	On request	**070752** [2)] ZSE2-2C1692	**083477** [2)] ZSE2-4C1943	On request

1) From position 1 to position 2 ➡ NO contact; from position 2 to position 3 ➡ NC contact.
2) No BG type examination

Subject to technical modifications; no responsibility is accepted for the accuracy of this information.

ZSE, 3-stage function
Tab connection, with spacer

Dimension drawings

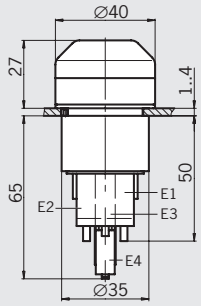

Front panel cut-out

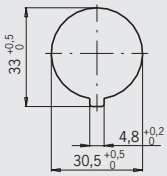

Wiring diagrams/function sequence

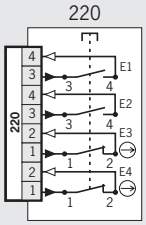

	210	220
NC	E3	E3, E4
NO	E1, E2	E1, E2

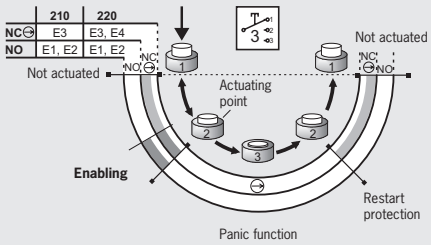

Contact
- open
- closed
- closed, enabling

Ordering table

Design	Connection	Version	Switching element				
			111: 1 NO+1 NC ⊖ +1NC	**121**: 1 NO+2 NC ⊖ +1 NC	**210**: 2 NO+1 NC ⊖	**220**: 2 NO+2 NC ⊖	**2202**: 2 NO/NC[1]
Built-in 3-stage **ZSE**	**Tab connector**	With spacer for installation in housing G2 or G3	On request	On request	On request	**091098** ZSE2-4C1801	On request

1) From position 1 to position 2 ➡ NO contact; from position 2 to position 3 ➡ NC contact.

Please turn over

For technical data see page 71

ZXE, 3-stage function
Screw terminals

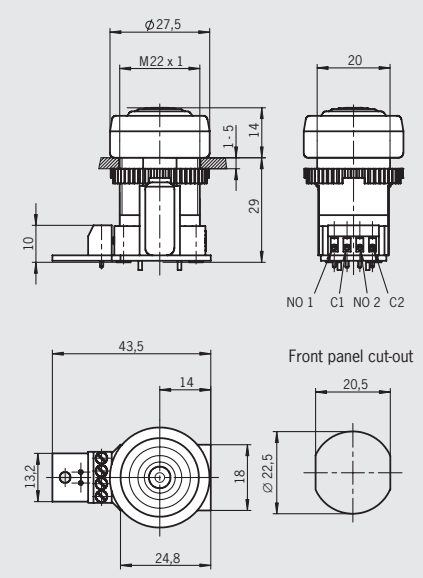

ZXE, 3-stage function
Screw terminals, with click sound [1]

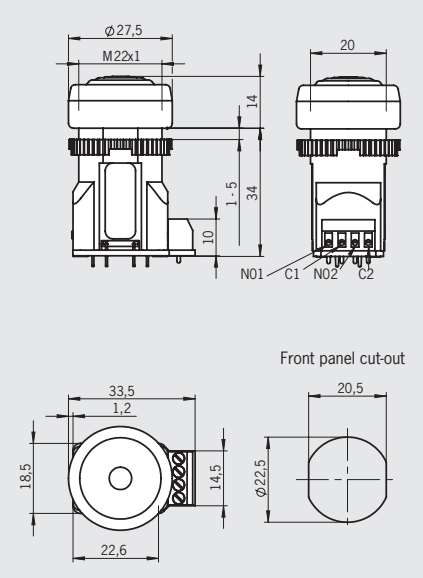

ZXE, 3-stage function
Tab connectors, with click sound [1]

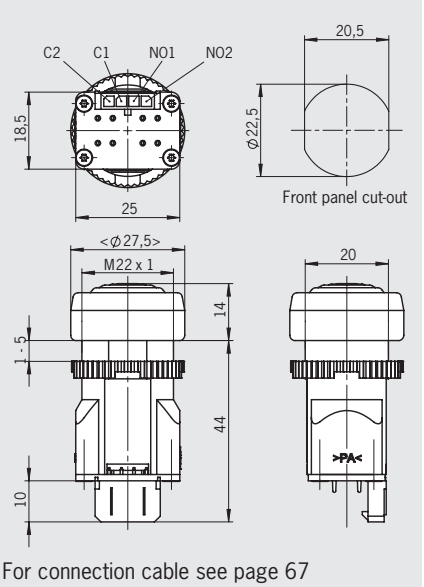

For connection cable see page 67

Wiring diagrams/function sequence

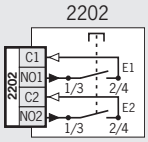

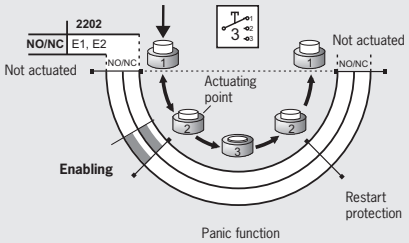

Contact
- open
- closed
- closed, enabling

Ordering table

Design	Connection	Version	Switching element **2202**: 2 NO/NC[2]
Built-in 3-stage **ZXE**	**Screw terminals**	Slow-action switching contact	**091336** ZXE-091336
		Snap-action switching contact	**104833** ZXE-104833
	Tab connectors	Snap-action switching contact	**111276** ZXE-111276

1) With version ZXE-104833 a click sounds during the change from stage 1 to stage 2 and during the return from stage 2 to stage 1.
2) From position 1 to position 2 ➡ NO contact; from position 2 to position 3 ➡ NC contact.

Subject to technical modifications; no responsibility is accepted for the accuracy of this information.

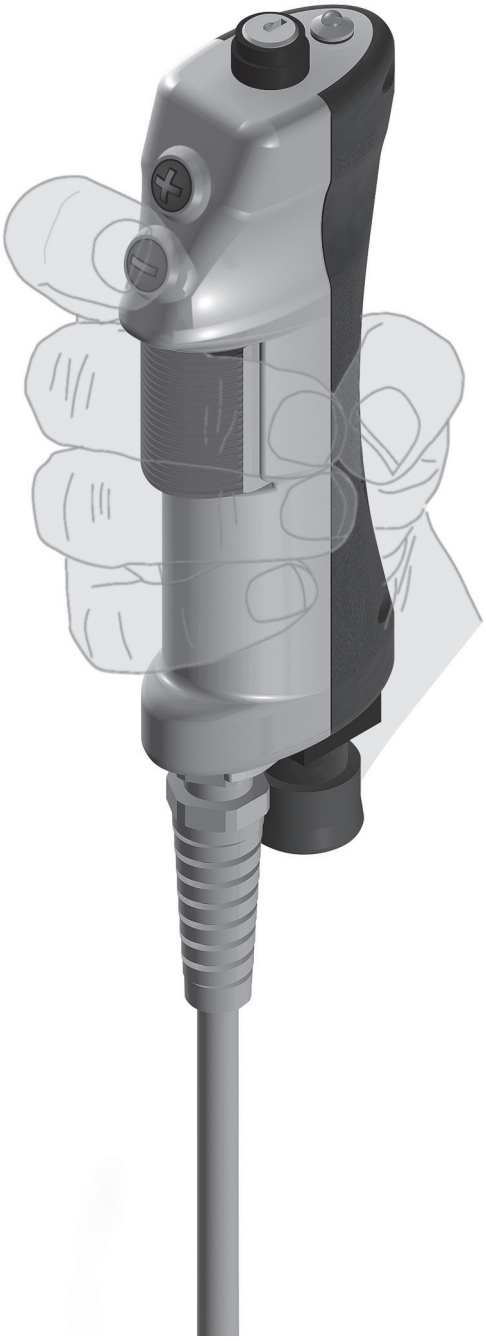

Article overview for enabling switch ZSM

		Page	16	16	17	18	18	19	19	20	21	22	22	22	23	23	24	24	25
		Plug connector	–	–	–	–	–	RC17	HAN Q17	–	-	–	–	–	RC12	RC12	RC12	RC12	–
Cable length [m]		Coiled connection cable	–	–	1.88 - 5	–	–	1.88 - 5	1.4 - 3.8	–	1.88 - 5	–	–	3 - 9	1.88 - 5	1.88 - 5	–	–	–
Cable length [m]		Straight connection cable	5	5	–	5	5	–	–	5	-	5	5	–	–	–	5	13	10
		Vibration signal	●	●	–	●	●	–	●	–	-	●	●	●	●	●	–	–	●
		ZS	3 W	3 W	3 W	2 NO	2 NO	2 NO	2 NO	3 W	1 C + 1 NO	2 NO	2 NO	2 NO	2 NO	2 NO	2 NO	2 NO	2 NO
Bottom	Stop command device	Emergency stop red 2 NC ⊖	–	–	–	–	●	–	–	–	–	–	–	–	–	–	–	–	–
Bottom	Stop command device	Machine stop black 2 NC ⊖	–	–	–	●	–	●	●	–	–	–	–	–	–	–	–	–	–
Bottom		Key-operated rotary switch	–	–	–	–	–	–	–	–	–	–	–	–	–	–	–	–	–
Front		One-touch function (joystick)	–	–	–	–	–	–	–	–	–	–	–	–	–	–	–	–	–
Front		Bottom pushbutton	white	white	white	⊖	⊖	⊖	⊕	–	–	⊖	⊖	⊖	⊖	⊖	⊖	⊖	⊖
Front		Top pushbutton	–	–	–	⊕	⊕	⊕	⊖	–	–	⊕	⊕	⊕	⊕	⊕	⊕	⊕	⊕
Top	Stop command device	Emergency stop red 2 NC ⊖	–	●	●	–	–	–	–	–	–	–	–	–	–	–	–	–	–
Top	Stop command device	Machine stop black 2 NC ⊖	●	–	–	–	–	–	–	–	–	–	–	–	–	–	–	–	–
Top		LED indicator	●	●	–	●	●	●	●	–	2 x ●	●	●	●	●	●	–	–	–
Top		Pushbutton	–	–	–	–	–	–	● Reset	–	–	–	–	–	–	–	–	–	–
Top		Key-operated rotary switch	–	–	–	●	●	–	–	–	–	–	–	–	–	–	–	–	–
Top		Selector switch	–	–	–	–	–	3-stage 1 of 3	–	–	–	–	–	–	–	–	–	–	4-stage 1 of 4
Top		Potentiometer	–	–	–	–	–	–	–	–	–	–	–	–	–	–	–	–	–
		Order No./item	**102059** ZSM4201-102059	**102966** ZSM4204-102966	**105645** ZSM4204-105645	**099715** ZSM2101-099715	**103126** ZSM2101-103126	**110317** ZSM2301-110317	**105075** ZSM2301-105075	**099713** ZSM4200-099713	**111871** ZSM2300-111871	**099714** ZSM2100-099714	**109971** ZSM2300-109971	**112803** ZSM2300-112803	**111462** ZSM2300-111462	**111594** ZSM2100-111594	**099716** ZSM2300-099716	**113290** ZSM2300-113290	**100697** ZSM2200-100697

Subject to technical modifications; no responsibility is accepted for the accuracy of this information.

106103 ZSM2100-106103	–	5-stage Gray code	–	–	●	–	–	⊕	⊖	–	–	–	–	2 NO	–	3	–	–	**25**
105308 ZSM2200-105308	–	12-stage Gray code	–	–	●	–	–	⊕	⊖	–	–	–	–	3 NO	–	5	–	–	**26**
103462 ZSM3100-103462	–	12-stage Gray code	–	–	–	–	–	⊕	⊖	–	–	–	–	2 NO + 1 C	–	–	1.88 - 5	–	**26**
112033 ZSM2200-112033	–	4-stage+ 12-stage Gray code	–	–	–	–	–	⊕	⊖	–	–	–	–	2 NO	●	1.5	–	RC17	**27**
105362 ZSM2200-105362	–	–	●	–	–	–	–	–	–	–	–	–	–	2 NO	●	8	–	–	**28**
111914 ZSM2200-111914	●	–	–	–	●	–	–	–	Black	–	●	–	–	2 NO	–	10	–	–	**28**
110338 ZSM2300-110338	–	–	●	–	●	–	–	⊕	⊖	–	–	–	–	2 NO	–	–	1.55 - 3.5	RC12	**29**
106670 ZSM2300-106670	–	–	–	● Reset	●	–	–	⊖	⊕	–	–	–	–	2 NO	●	–	1.25 - 3.1	HAN Q17	**30**
106374 ZSM2300-106374	–	–	–	Black	–	–	–	–		●	–	–	–	1 NO + 1 C	–	–	–	RC17	**30**

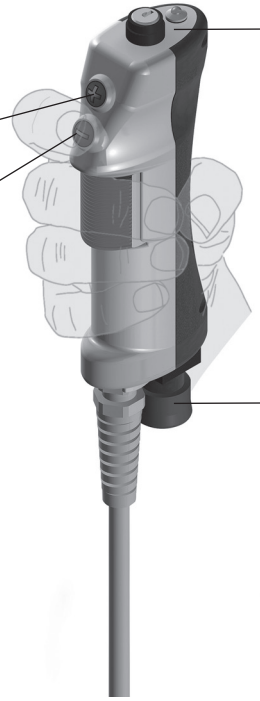

Top
An emergency stop or machine stop can be installed in the upper position for rapid access in an emergency. Alternatively, there is pace for various buttons, switches or an LED.

Front top **Front bottom**
There is space for two pushbuttons on the front. The one-touch function can also be installed.

Bottom
An emergency stop, a machine stop or a key-operated rotary switch is built in here in some pre-assembled versions. The kit has a blind plug here for great flexibility. The cable gland protects the stop command device in the event of a fall.

For technical data see page 71

Subject to technical modifications; no responsibility is accepted for the accuracy of this information.

Enabling switch ZSM with upper stop command device

- **3-stage function**
- **Stop command device**
- **Vibration signal optional**
- **LED indicator optional**
- **Pushbutton**
- **Coiled connection cable optional**

ZSM4201-102059, 3-stage function
Flying lead, machine stop

ZSM4204-102966, 3-stage function
Flying lead, emergency stop device

3-stage function
Enabling function is only active in the second stage (middle position, actuating point). If the button is released or pushed further (panic function), the enabling is removed (dependent on the wiring, see function sequence).

Stop command device
Two-channel emergency stop device (red, with pull-to-reset button) or machine stop (black, with pull-to-reset button) on the switch housing, for different wiring concepts.
Upper position for rapid access in an emergency

Vibration signal
The vibration signal is used for tactile feedback of the enabling position.

LED indicator
The LED indicator is used for visual feedback directly at the enabling switch.

Pushbutton
Additional functions can be run directly at the enabling switch using the buttons.

Cable
The high-quality connection cables are available in a straight or coiled version.

Dimension drawing

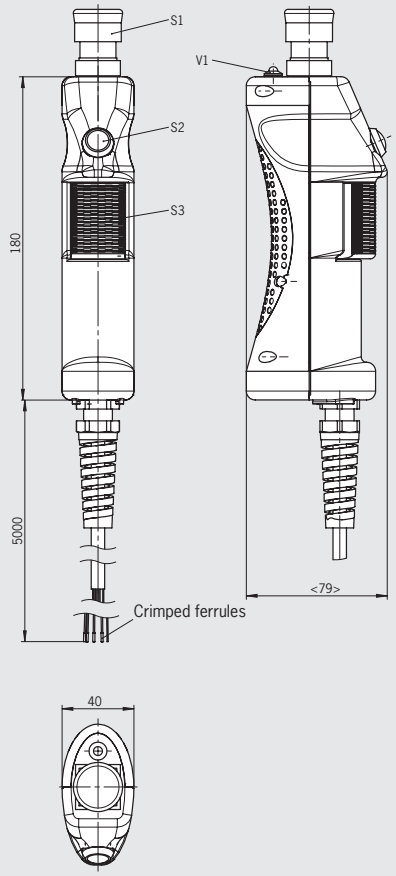

For wiring diagram see page 72

Switching element/function sequence

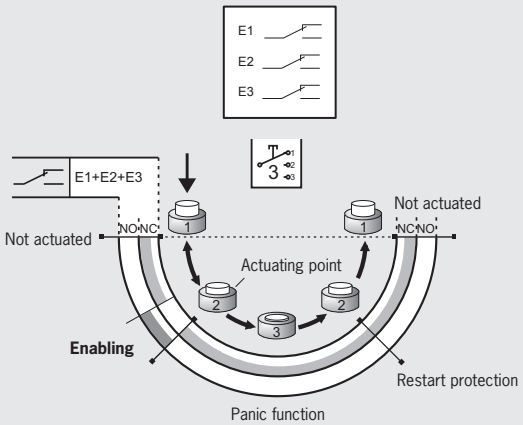

Ordering table

Design	Connection	Cable length	Version	Order No./item
ZSM	**Flying lead 23 x 0.14 mm²**	5 m Straight	Enabling switch with 3 changeover contacts (S3), black machine stop (S1), vibration signal, yellow LED indicator (V1), white pushbutton (S2)	**102059** ZSM4201-102059
			Enabling switch with 3 changeover contacts (S3), red emergency stop device (S1), vibration signal, yellow LED indicator (V1), white pushbutton (S2)	**102966** ZSM4204-102966

Subject to technical modifications; no responsibility is accepted for the accuracy of this information.

ZSM4204-105645, 3-stage function
Flying lead, emergency stop device

Dimension drawing

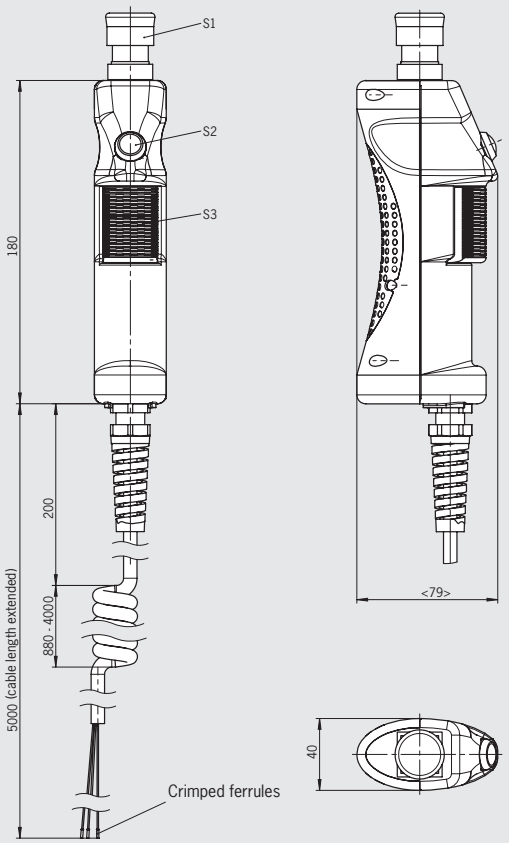

For wiring diagram see page 72

Switching element/function sequence

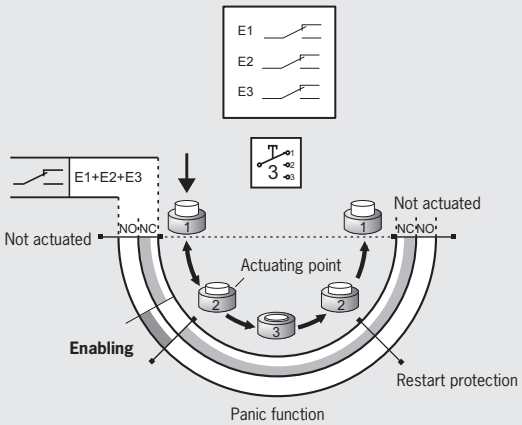

Ordering table

Design	Connection	Cable length	Version	Order No./item
ZSM	**Flying lead** **23 x 0.14 mm²**	1.88 ... 5 m coiled	Enabling switch with 3 changeover contacts (S3), red emergency stop device (S1) white pushbutton (S2)	**105645** ZSM4204-105645

For technical data see page 71

Enabling switch ZSM with lower stop command device

- **3-stage function**
- **Stop command device**
- **Vibration signal optional**
- **LED indicator**
- **Reset button optional**
- **+ and – buttons**
- **Selector switch optional**
- **Key-operated rotary switch optional**
- **Coiled connection cable optional**
- **Plug connector optional**

ZSM2101-099715, 3-stage function
Flying lead, machine stop

ZSM2101-103126, 3-stage function
Flying lead, emergency stop device

3-stage function
Enabling function is only active in the second stage (middle position, actuating point). If the button is released or pushed further (panic function), the enabling is removed (dependent on the wiring, see function sequence).

Stop command device
Two-channel emergency stop device (red, with pull-to-reset button) or machine stop (black, with pull-to-reset button) on the switch housing, for different wiring concepts.
Lower position, protected by anti-kink cable gland in case of a fall.

Vibration signal
The vibration signal is used for tactile feedback of the enabling position.

LED indicator
The LED indicator is used for visual feedback directly at the enabling switch.

Reset button
Button for reset function directly from the enabling switch. Laser inscription on the button head: **C** (cancel).

+ and – buttons
These buttons can be configured individually. For example for moving axes in the positive or negative direction.

Selector switch
As required, the adjustable detent positions can, e.g., be used for axis, speed or range selection.

Key-operated rotary switch
For individual use, e.g. as operating mode selector switch.

Cable
The high-quality connection cables are available in a straight or coiled version.

Dimension drawing

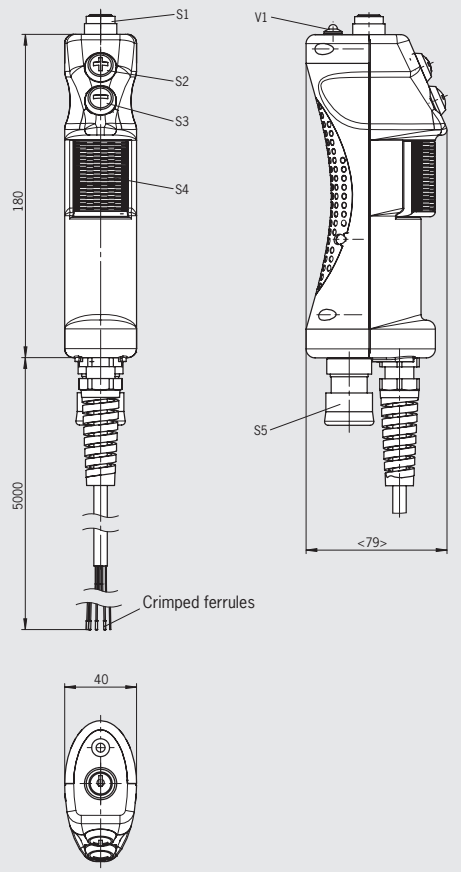

For wiring diagram see page 73

Switching element/function sequence

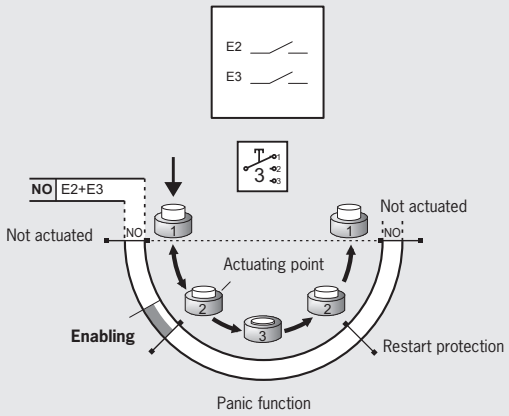

Ordering table

Design	Connection	Cable length	Version	Order No./item
ZSM	**Flying lead 23 x 0.14 mm²**	5 m Straight	Enabling switch with 2 NO contacts (S4), black machine stop (S5), vibration signal, yellow LED indicator (V1), +/- buttons (S2/S3), key-operated rotary switch (S1)	**099715** ZSM2101-099715
			Enabling switch with 2 NO contacts (S4), red emergency stop device (S5), vibration signal, yellow LED indicator (V1), +/- buttons (S2/S3), key-operated rotary switch (S1)	**103126** ZSM2101-103126

Subject to technical modifications; no responsibility is accepted for the accuracy of this information.

ZSM2301-110317, 3-stage function
Plug connector RC17, machine stop

ZSM2301-105075, 3-stage function
Plug connector HAN Q17, machine stop

Dimension drawing

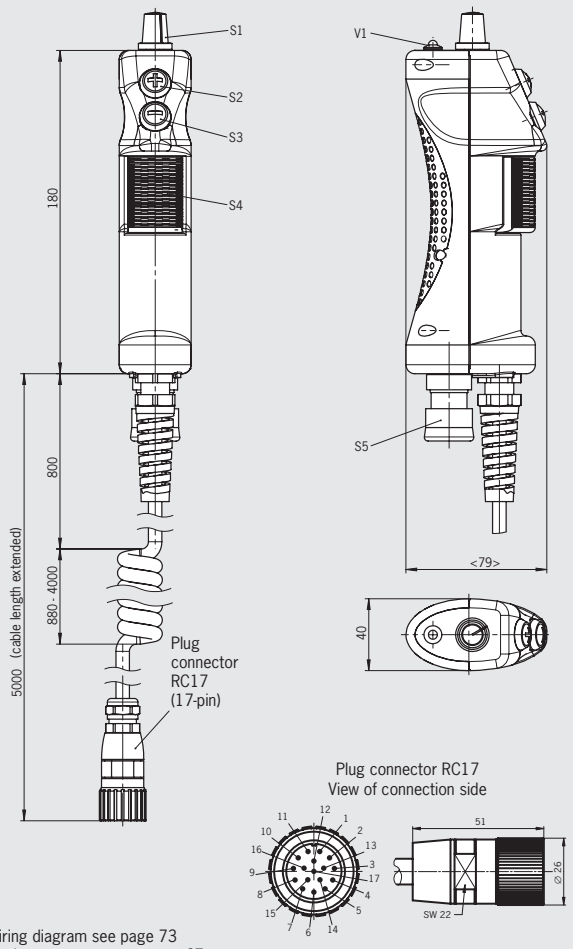

For wiring diagram see page 73
For mating connectors see page 67

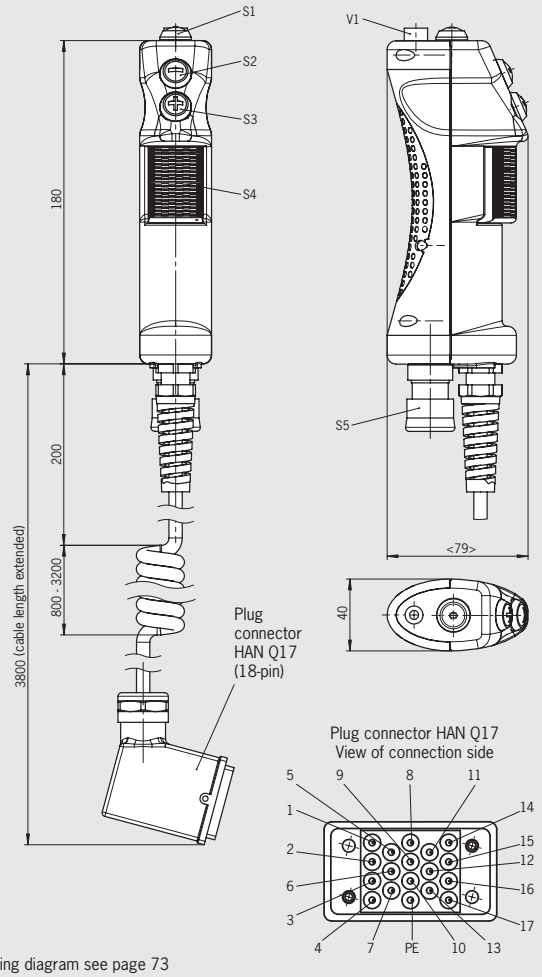

For wiring diagram see page 73

Switching element/function sequence

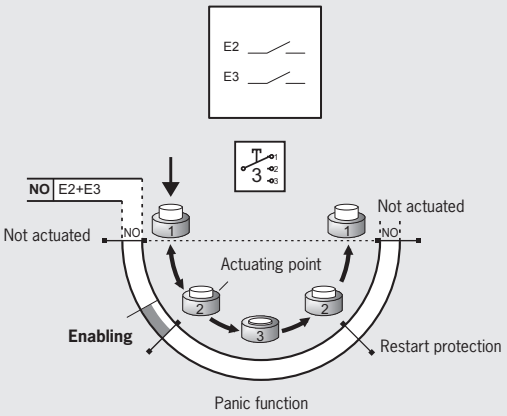

Ordering table

Design	Connection	Cable length	Version	Order No./item
ZSM	**RC17** Plug connector (17-pin)	1.88 ... 5 m coiled	Enabling switch with 2 NO contacts (S4), black machine stop (S5), yellow LED indicator (V1), +/- buttons (S2/S3), selector switch, 3-stage 1 from 3 (S1)	**110317** ZSM2301-110317
	HAN Q17 Plug connector (18-pin)	1.4 ... 3.8 m coiled	Enabling switch with 2 NO contacts (S4), black machine stop (S5), vibration signal, red/green LED indicator (V1), buttons +/– (S3/S2), reset button (S1)	**105075** ZSM2301-105075

For technical data see page 71

Enabling switch ZSM without stop command device

- **3-stage function**
- **Vibration signal optional**
- **LED indicator optional**
- **+ and – buttons optional**
- **Plug connector optional**

3-stage function
Enabling function is only active in the second stage (middle position, actuating point). If the button is released or pushed further (panic function), the enabling is removed (dependent on the wiring, see function sequence).

Vibration signal
The vibration signal is used for tactile feedback of the enabling position.

LED indicator
The LED indicator is used for visual feedback directly at the enabling switch.

+ and – buttons
These buttons can be configured individually. For example for moving axes in the positive or negative direction.

Cable
The high-quality connection cables are available in a straight or coiled version.

ZSM4200-099713, 3-stage function
Flying lead

Dimension drawing

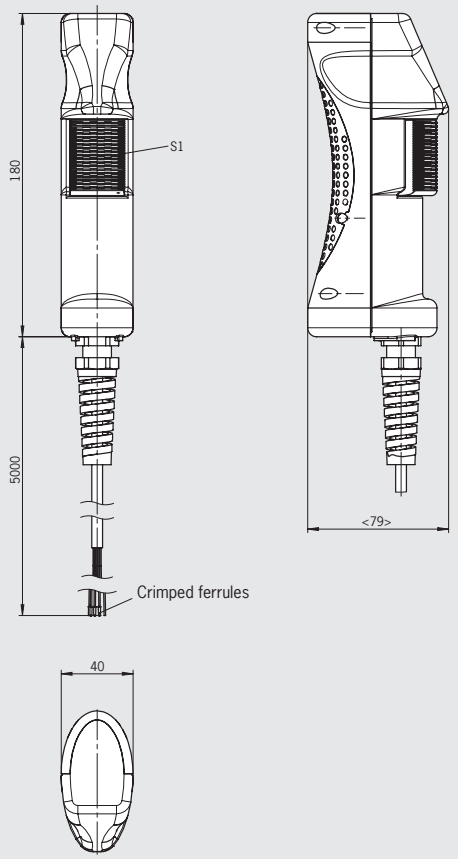

For wiring diagram see page 74

Switching element/function sequence

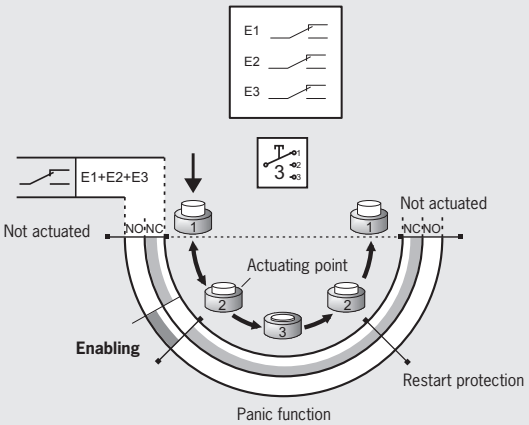

Ordering table

Design	Connection	Cable length	Version	Order No./item
ZSM	**Flying lead** **12 x 0.14 mm²**	5 m Straight	Enabling switch with 3 changeover contacts (S1)	**099713** ZSM4200-099713

Subject to technical modifications; no responsibility is accepted for the accuracy of this information.

ZSM2300-111871, 3-stage function
Flying lead

Dimension drawing

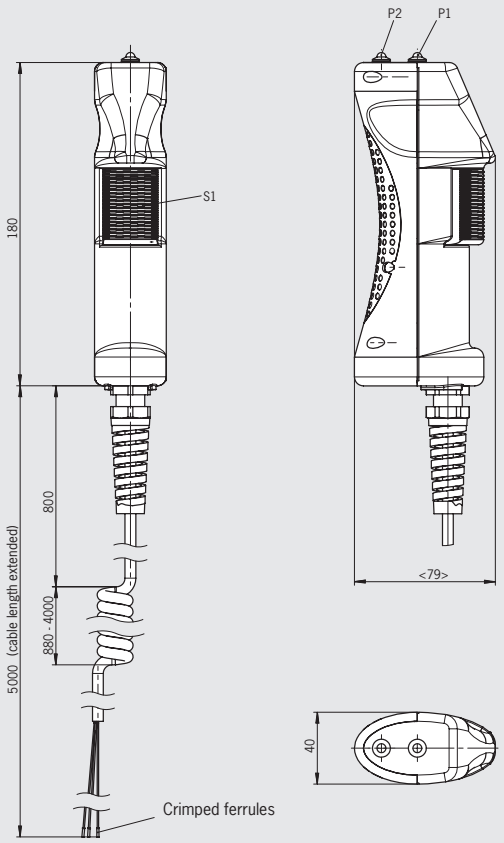

For wiring diagram see page 74

Switching element/function sequence

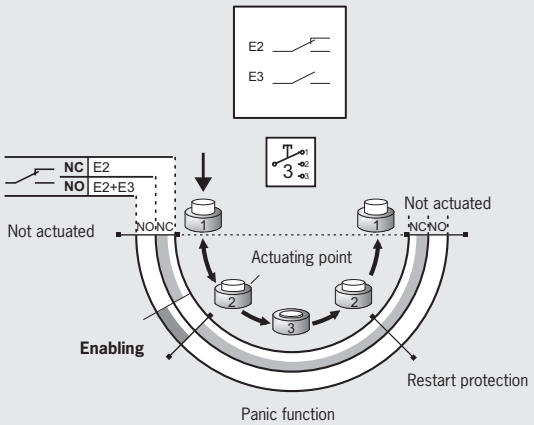

Ordering table

Design	Connection	Cable length	Version	Order No./item
ZSM	**Flying lead 12 x 0.14 mm²**	1.88 ... 5 m coiled	Enabling switch with 1 changeover contact and one NO contact (S1), 2 green (P1) and yellow (P2) LED indicators	**111871** ZSM2300-111871

Please turn over

For technical data see page 71

ZSM2100-112803, 3-stage function
Flying lead

ZSM2100-099714, 3-stage function
Flying lead

ZSM2300-109971, 3-stage function
Flying lead

Dimension drawing

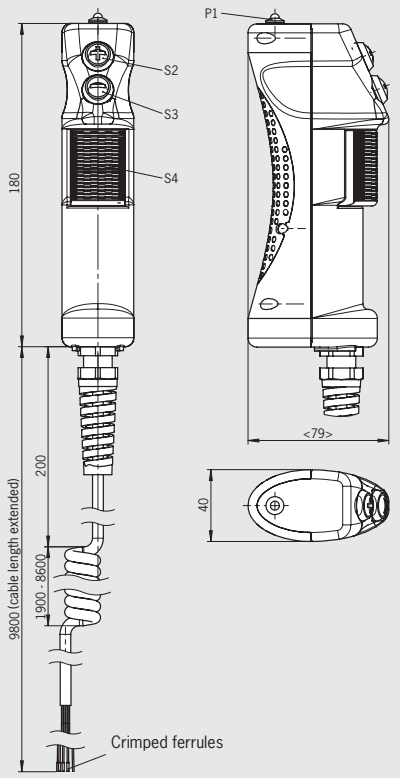

For wiring diagram see page 74

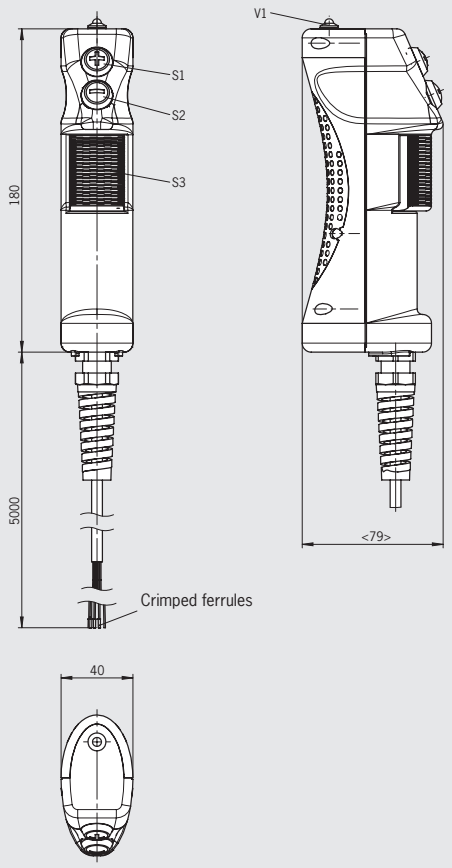

For wiring diagram see page 74

Switching element/function sequence

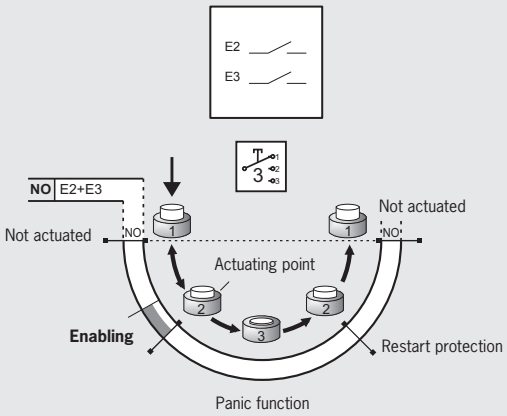

Ordering table

Design	Connection	Cable length	Version	Order No./item
ZSM	Flying lead 12 x 0.14 mm²	3 ... 9 m coiled	Enabling switch with 2 NO contacts (S3), vibration signal, yellow LED indicator (V1), buttons +/– (S1/S2), alternative wiring	**112803** ZSM2300-112803
		5 m Straight	Enabling switch with 2 NO contacts (S3), vibration signal, yellow LED indicators (V1), buttons +/– (S1/S2)	**099714** ZSM2100-099714
			Enabling switch with 2 NO contacts (S3), vibration signal, yellow LED indicator (V1), buttons +/– (S1/S2), alternative wiring	**109971** ZSM2300-109971

Subject to technical modifications; no responsibility is accepted for the accuracy of this information.

ZSM2300-111462, 3-stage function
Plug connector RC12

ZSM2100-111594, 3-stage function
Plug connector RC12

Dimension drawing

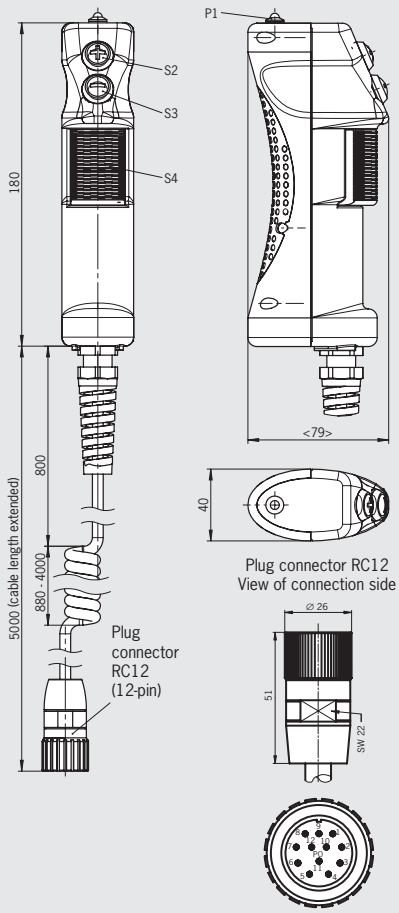

For wiring diagram see page 75
For mating connectors see page 67

Switching element/function sequence

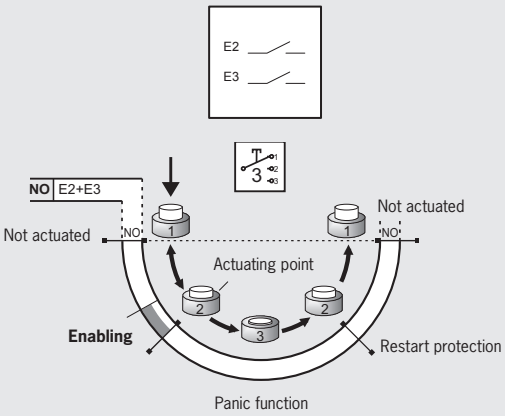

Ordering table

Design	Connection	Cable length	Version	Order No./item
ZSM	**RC12** Plug connector (12-pin)	1.88 ... 5 m coiled	Enabling switch with 2 NO contacts (S3), yellow LED indicator (P1), buttons +/– (S1/S2)	**111462** ZSM2300-111462
			Enabling switch with 2 NO contacts (S3), yellow LED indicator (P1), buttons +/– (S1/S2), alternative wiring	**111594** ZSM2100-111594

Please turn over

For technical data see page 71

ZSM2300-099716, 3-stage function
Plug connector RC12

ZSM2300-113290, 3-stage function
Plug connector RC12

Dimension drawing

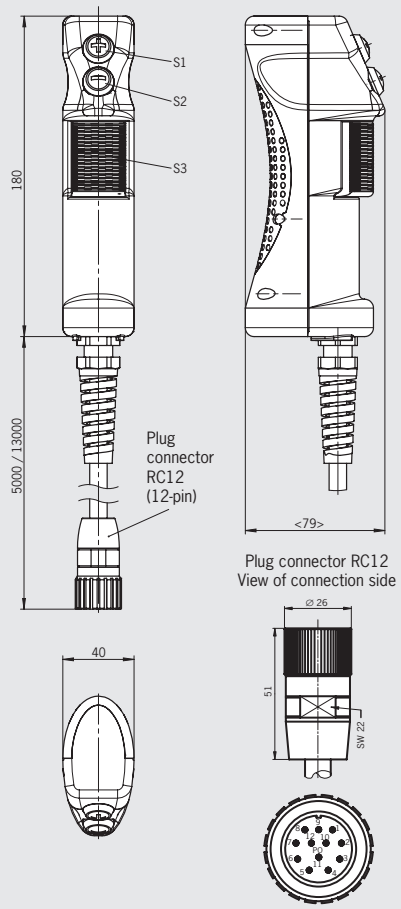

For wiring diagram see page 75
For mating connectors see page 67

Switching element/function sequence

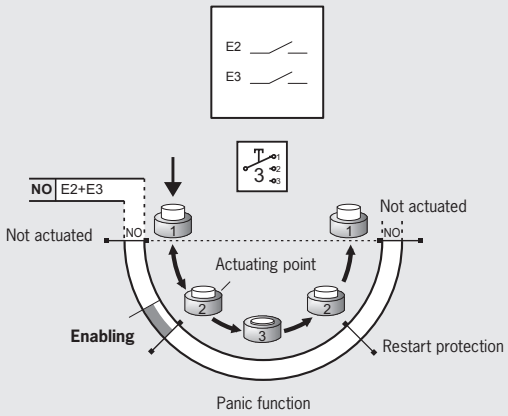

Ordering table

Design	Connection	Cable length	Version	Order No./item
ZSM	**RC12** Plug connector (12-pin)	5 m Straight	Enabling switch with 2 NO contacts (S3), buttons +/– (S1/S2)	**099716** ZSM2300-099716
		13 m Straight	Enabling switch with 2 NO contacts (S3), buttons +/– (S1/S2)	**113290** ZSM2300-113290

Subject to technical modifications; no responsibility is accepted for the accuracy of this information.

Enabling switch ZSM without stop command device

- **3-stage function**
- **Vibration signal optional**
- **LED indicator optional**
- **+ and – buttons**
- **Selector switch**
- **Coiled connection cable optional**

3-stage function
Enabling function is only active in the second stage (middle position, actuating point). If the button is released or pushed further (panic function), the enabling is removed (dependent on the wiring, see function sequence).

Vibration signal
The vibration signal is used for tactile feedback of the enabling position.

LED indicator
The LED indicator is used for visual feedback directly at the enabling switch.

+ and – buttons
These buttons can be configured individually. For example for moving axes in the positive or negative direction.

Selector switch
As required, the adjustable detent positions can, e.g., be used for axis, speed or range selection.

Cable
The high-quality connection cables are available in a straight or coiled version.

ZSM2200-100697, 3-stage function
Flying lead, selector switch

Dimension drawing

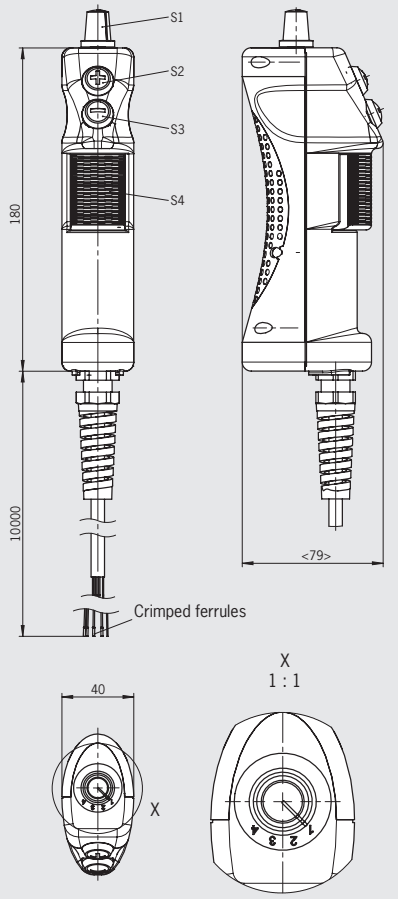

For wiring diagram see page 75

ZSM2100-106103, 3-stage function
Flying lead, selector switch

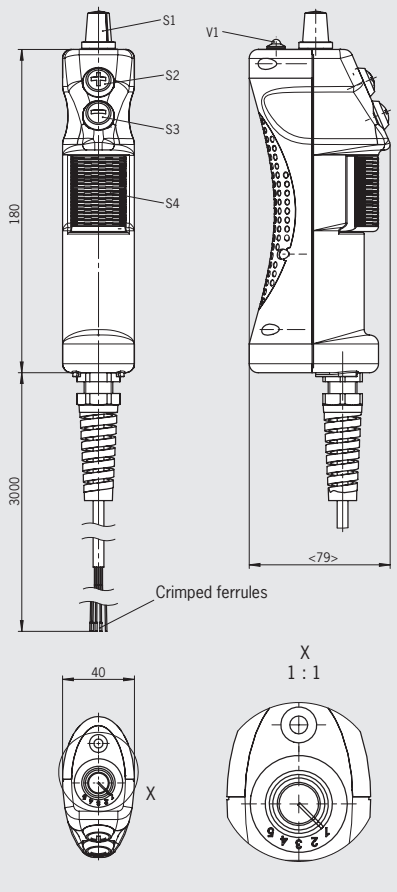

For wiring diagram see page 76

Switching element/function sequence

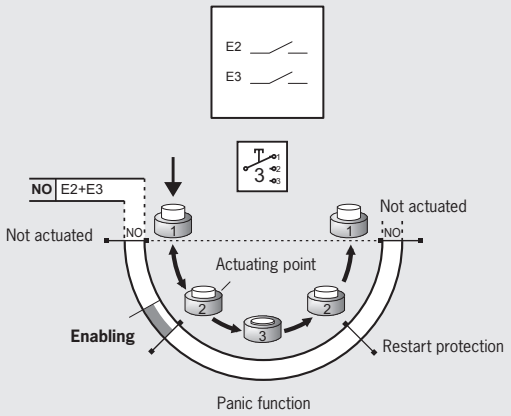

Ordering table

Design	Connection	Cable length	Version	Order No./item
ZSM	**Flying lead 23 x 0.14 mm²**	10 m Straight	Enabling switch with 2 NO contacts (S4), vibration signal, buttons +/– (S2/S3), selector switch 4-stage 1 from 4 (S1)	**100697** ZSM2200-100697
	Flying lead 12 x 0.14 mm²	3 m Straight	Enabling switch with 2 NO contacts (S4), yellow LED indicator (V1), buttons +/– (S2/S3), selector switch 5-stage Gray code (S1)	**106103** ZSM2100-106103

Please turn over

For technical data see page 71

ZSM2200-105308, 3-stage function
Flying lead, selector switch

ZSM3100-103462, 3-stage function
Flying lead, selector switch

Dimension drawing

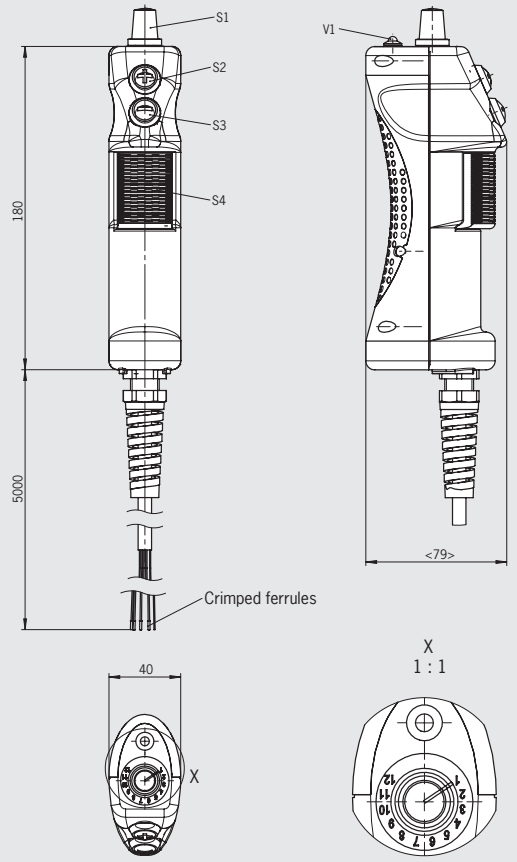

For wiring diagram see page 76

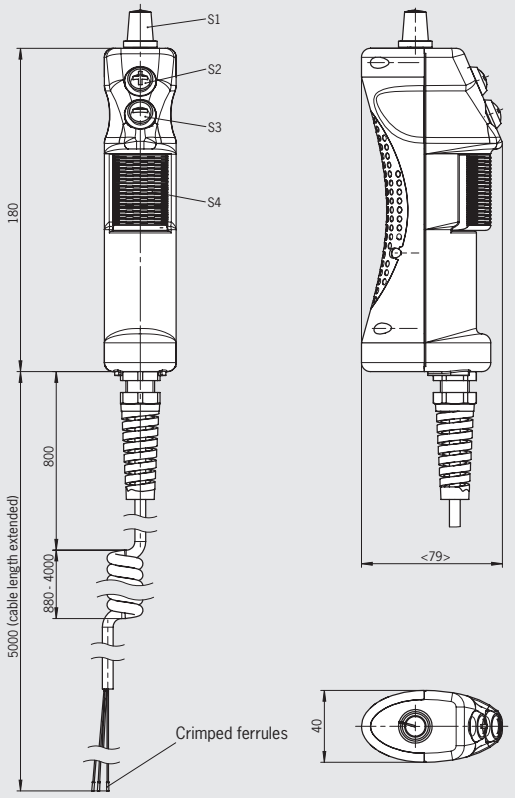

For wiring diagram see page 76

Switching element/function sequence

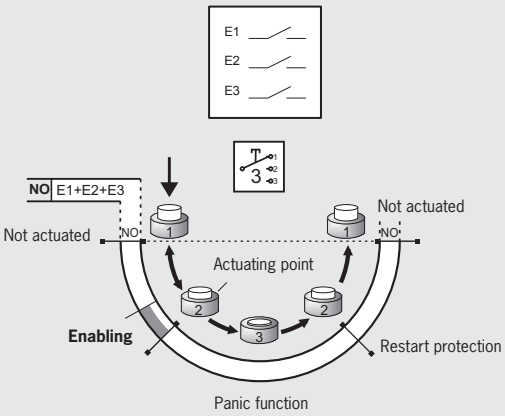

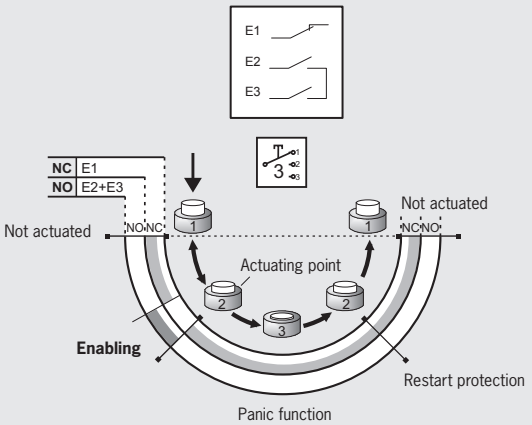

Ordering table

Design	Connection	Cable length	Version	Order No./item
ZSM	**Flying lead 23 x 0.14 mm²**	5 m Straight	Enabling switch with 3 NO contacts (S4), yellow LED indicator (V1), buttons +/– (S2/S3), selector switch 12-stage Gray code (S1)	**105308** ZSM2200-105308
	Flying lead 12 x 0.14 mm²	1.88 ... 5 m coiled	Enabling switch with 1 NC contact and 2 NO contacts (S4), buttons +/– (S2/S3), selector switch 12-stage Gray code (S1)	**103462** ZSM3100-103462

Subject to technical modifications; no responsibility is accepted for the accuracy of this information.

ZSM2200-112033, 3-stage function
Plug connector RC17, 2-stage switch

Dimension drawing

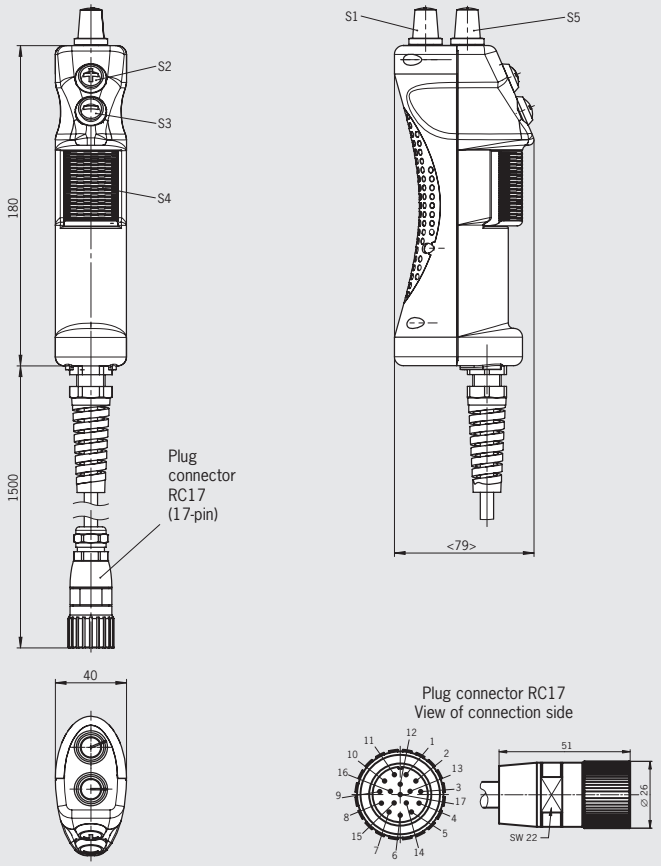

For wiring diagram see page 76
For mating connectors see page 67

Switching element/function sequence

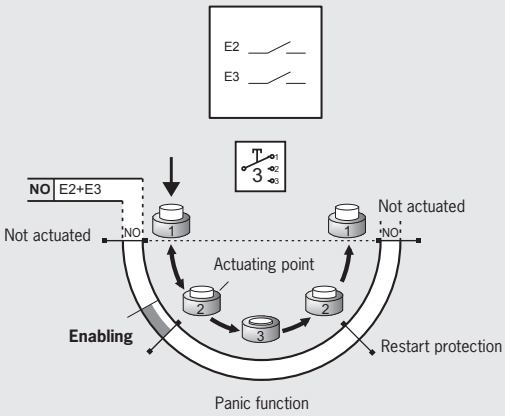

Ordering table

Design	Connection	Cable length	Version	Order No./item
ZSM	**RC17** Plug connector (17-pin)	1.5 m Straight	Enabling switch with 2 NO contacts (S4), vibration signal, buttons +/– (S2/S3), selector switch 4-stage Gray code (S1), selector switch 12-stage Gray code (S5)	**112033** ZSM2200-112033

For technical data see page 71

Enabling switch ZSM without stop command device

- **3-stage function**
- **Vibration signal optional**
- **LED indicator optional**
- **Reset button optional**
- **+ and – buttons optional**
- **Pushbutton optional**
- **Key-operated rotary switch optional**
- **Mini joystick optional**
- **Coiled connection cable optional**
- **Plug connector optional**

3-stage function
Enabling function is only active in the second stage (middle position, actuating point). If the button is released or pushed further (panic function), the enabling is removed (dependent on the wiring, see function sequence).

Vibration signal
The vibration signal is used for tactile feedback of the enabling position.

LED indicator
The LED indicator is used for visual feedback directly at the enabling switch.

Reset button
Button for reset function directly from the enabling switch. Laser inscription on the button head: **C** (cancel).

+ and – buttons
These buttons can be configured individually. For example for moving axes in the positive or negative direction.

Pushbutton
Additional functions can be run directly at the enabling switch using the buttons.

Key-operated rotary switch
For individual use, e.g. as operating mode selector switch.

Rotary potentiometer
For individual use, e.g. for adjusting the speed.

One-touch function (joystick)
The four contacts are connected to a common pin. This permits a one-touch function irrespective of the actuating direction.

Cable
The high-quality connection cables are available in a straight or coiled version.

ZSM2200-105362, 3-stage function
Flying lead, key-operated rotary switch

Dimension drawing

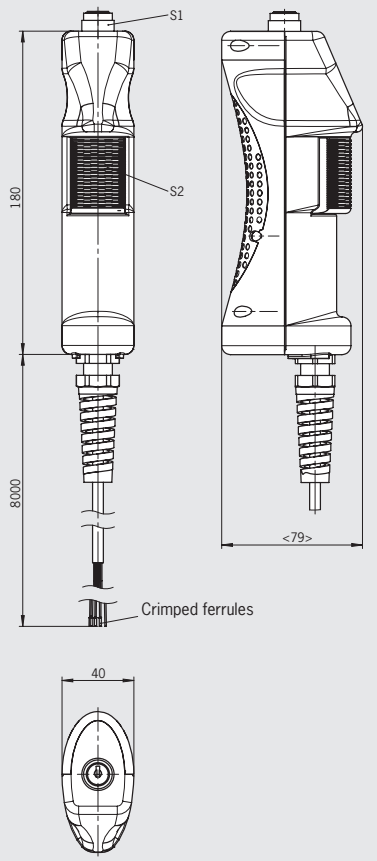

For wiring diagram see page 77

ZSM2200-111914, 3-stage function Flying lead, key-operated rotary switch, potentiometer

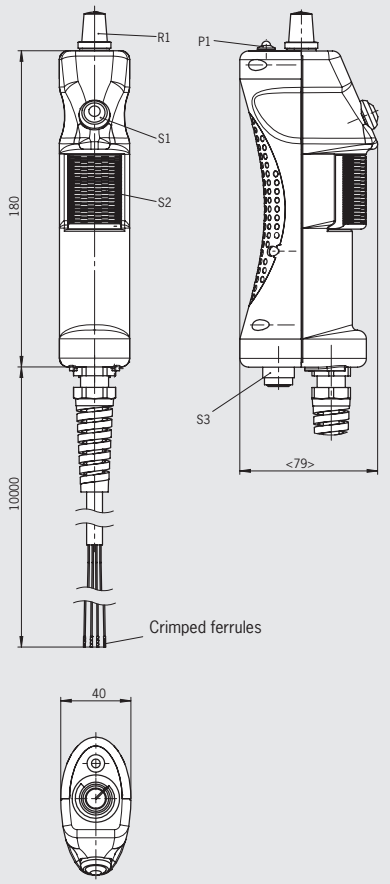

For wiring diagram see page 77

Switching element/function sequence

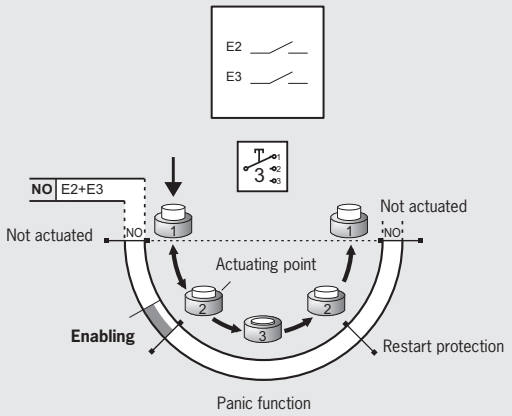

Ordering table

Design	Connection	Cable length	Version	Order No./item
ZSM	**Flying lead 12 x 0.14 mm²**	8 m Straight	Enabling switch with 2 NO contacts (S2), vibration signal, key-operated rotary switch (S1)	**105362** ZSM2200-105362
	RC12 Plug connector (12-pin)	10 m Straight	Enabling switch with 2 NO contacts (S4), rotary potentiometer 4.7 kΩ (R1), yellow LED indicator (P1), black pushbutton (S1), key-operated rotary switch (S3)	**111914** ZSM2200-111914

Subject to technical modifications; no responsibility is accepted for the accuracy of this information.

ZSM2300-110338, 3-stage function
Plug connector RC12, key operated switch

Dimension drawing

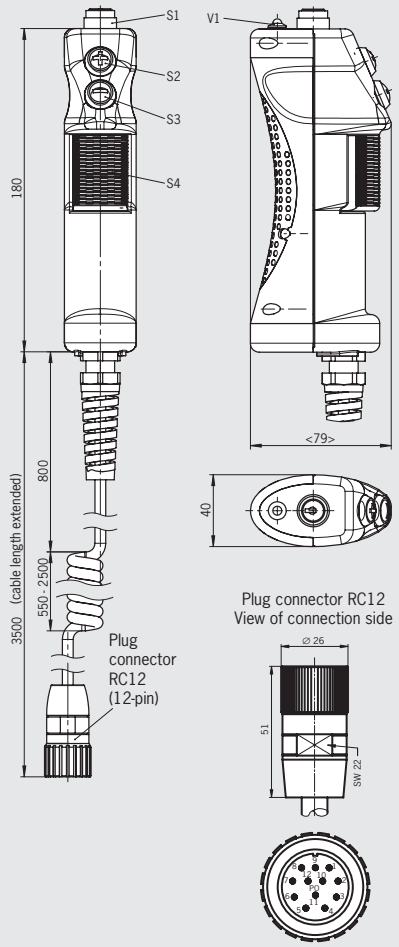

For wiring diagram see page 77
For mating connectors see page 67

Switching element/function sequence

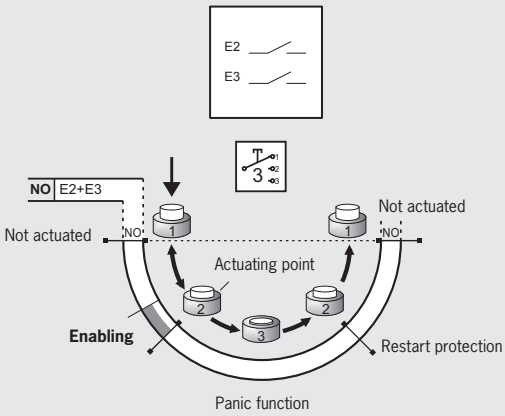

Ordering table

Design	Connection	Cable length	Version	Order No./item
ZSM	**RC12** Plug connector (12-pin)	1.55 ... 3.5 m coiled	Enabling switch with 2 NO contacts (S4), yellow LED indicator (V1), buttons +/– (S2/S3), key-operated rotary switch (S1)	**110338** ZSM2300-110338

Please turn over

For technical data see page 71

ZSM2300-106670, 3-stage function
Plug connector HAN Q17, reset button

Dimension drawing

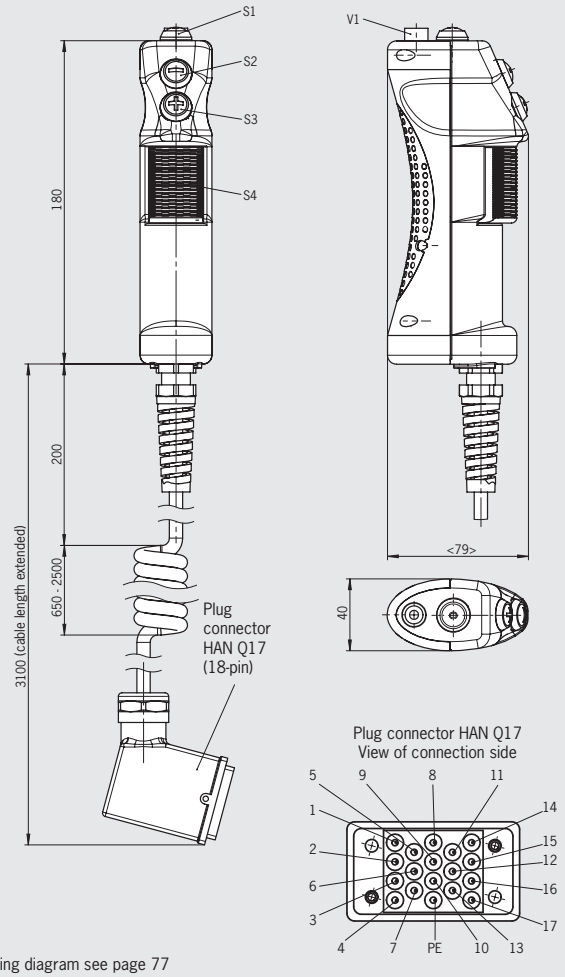

For wiring diagram see page 77

Switching element/function sequence

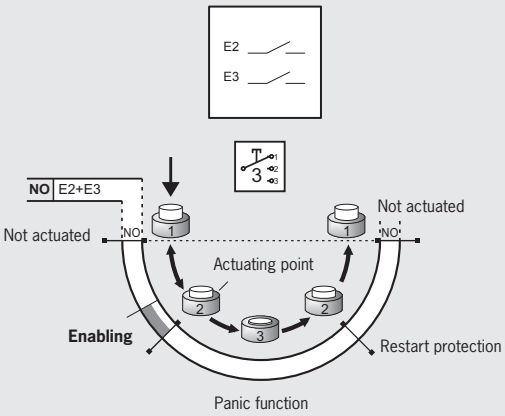

ZSM2300-106374, 3-stage function
Plug connector RC17, one-touch function (joystick)

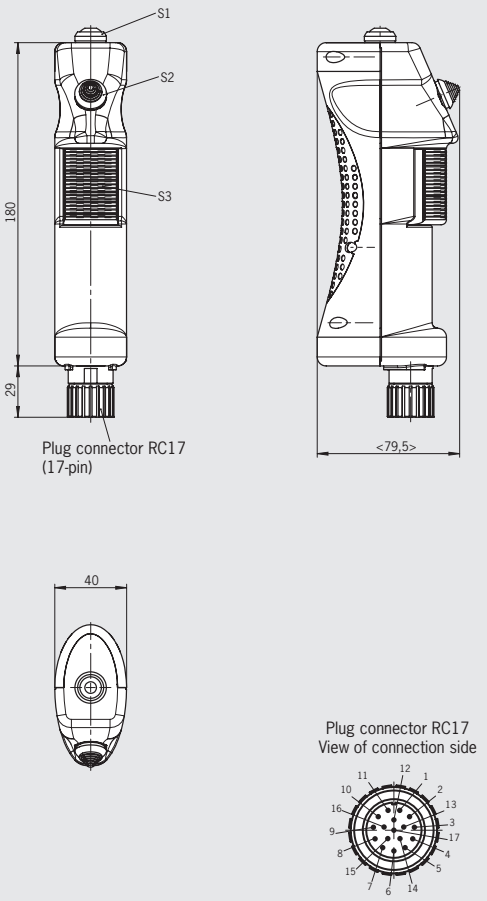

For wiring diagram see page 78
For mating connectors see page 67
For connection cable see page 69

Switching element/function sequence

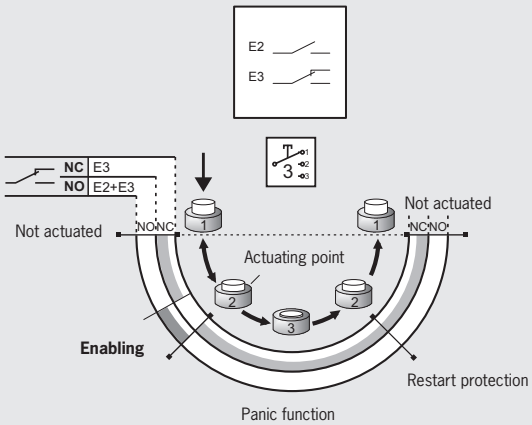

Ordering table

Design	Connection	Cable lengths	Version	Order No./item
ZSM	**HAN Q17** Plug connector (18-pin)	1.25 ... 3.1 m coiled	Enabling switch with 2 NO contacts (S4), vibration signal, yellow LED indicator (V1), buttons +/– (S3/S2), reset-button (S1)	**106670** ZSM2300-106670
	RC17 Plug connector (17-pin)	without cable	Enabling switch with 1 NO contact and 1 changeover contact (S3), one-touch function (S2), black pushbutton (S1)	**106374** ZSM2300-106374

Subject to technical modifications; no responsibility is accepted for the accuracy of this information.

Selection table for enabling switches ZSA, ZSB and ZSR

Design

G1	Housing G1 (black)
G2	Housing G2 (yellow)
G3	Housing G3 (yellow)

Function

3	3-stage (OFF - enabling - OFF)

Connection

C	Tab connector, screw terminal, flying lead
SS4	Plug connector 3-pin + PE
SVM5	Plug connector M12 5-pin
C16	Plug connector 6-pin + PE
MR7	Plug connector 7-pin
MR8	Plug connector 8-pin
MR10	Plug connector 10-pin
HAN10	Plug connector 10-pin + PE
RC12	Plug connector 11-pin + PE
BS12	Plug connector 12-pin
RC17	Plug connector 17-pin
UT23	Plug connector 23-pin

Additional elements

Z	Additional elements, e.g. buttons, LEDs, key-operated rotary switches, selector switches, etc.

Enabling switch ZSB Housing G1 **Enabling switch ZSR Housing G2** **Enabling switch ZSB Housing G3**

			Stages	Connection												Z	Page
G1	G2	G3	3	C	SS4	SVM5	C16	MR7	MR8	MR10	HAN10	RC12	BS12	RC17	UT23		
●			●	●													32 - 34
●			●		●	●											35
●			●				●				●	●					36
●			●												●		37
●			●									●		●			38
●			●	●												●	39
●			●					●	●							●	40
●			●									●	●	●		●	41
	●		●	●													42/43
		●	●	●												●	44
		●	●	●								●				●	45
		●	●	●												●	46
		●	●											●		●	47/48

Enabling switch ZSA

- **Housing G1**
- **3-stage function**
- **Single or dual-channel version**
- **Connection cable straight or coiled**
- **Wall holder optional**

ZSA, 3-stage function
Flying lead

Dimension drawings

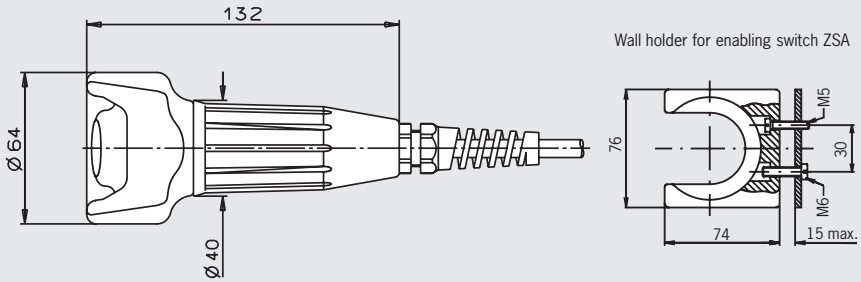

3-stage function
Enabling function is only active in the second stage (middle position, actuating point). If the button is released or pushed further (panic function), the enabling is removed (dependent on the wiring, see function sequence).

Cable
The high-quality connection cables (individual screening of the safety contacts) are available straight or coiled.

Switching elements (see also page 8)
- **111** 1 NO + 1 NC ⊖ + 1 NC
- **121** 1 NO + 2 NC ⊖ + 1 NC
- **210** 2 NO + 1 NC ⊖
- **220** 2 NO + 2 NC ⊖

Cable lengths (coiled cable pulled out straight)

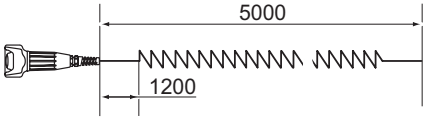

Wiring diagrams/function sequence

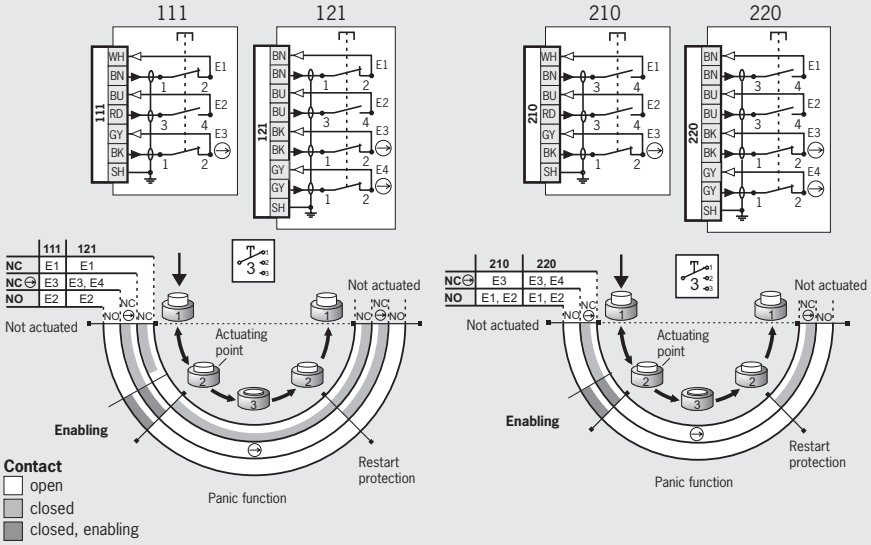

Ordering table

Design	Connection/ cross-section	Cable length	Version	Switching element			
				111: 1 NO + 1 NC ⊖ +1 NC	**121**: 1 NO + 2 NC ⊖ +1 NC	**210**: 2 NO + 1 NC ⊖	**220**: 2 NO + 2 NC ⊖
G1 3-stage	**Flying lead 6 x 0.34 mm²**	1.5 m straight	incl. wall holder	**057089** ZSA2A1L15AC1689	-	On request	-
		2 m straight		-	-	**099371** ZSA2A2G02A	-
		2.5 m straight	incl. wall holder	**072728** ZSA2A1L25AC1689	-	On request	-
		5 m straight		**055402** ZSA2A1G05A	-	**055406** ZSA2A2G05A	-
		5 m coiled		**055404** ZSA2A1S05A	-	**055408** ZSA2A2S05A	-
		10 m straight		**055403** ZSA2A1G10A	-	**055407** ZSA2A2G10A	-
		15 m straight		On request	-	**057007** ZSA2A2G15A	-
		20 m straight		On request	-	**075807** ZSA2A2G20A	-
		25 m straight		On request	-	**078939** ZSA2A2G25A	-
	Flying lead 8 x 0.34 mm²	2.5 m straight	incl. wall holder	-	On request	-	**086788** ZSA2A4L25AC1689
		5 m straight		-	**070784** ZSA2A3G05A	-	**070764** ZSA2A4G05A
		5 m coiled		-	**070786** ZSA2A3S05A	**057010** ZSA2A2S05AC1643	**070766** ZSA2A4S05A
		10 m straight		-	**070785** ZSA2A3G10A	-	**070765** ZSA2A4G10A
		20 m straight		-	On request	-	**073300** ZSA2A4G20A

Subject to technical modifications; no responsibility is accepted for the accuracy of this information.

For technical data see page 71

Enabling switch ZSA

- **Housing G1**
- **3-stage function**
- **Single or dual-channel version**
- **Connection cable straight or coiled**
- **Plug connector optional**
- **Direct connection to safety switch optional**
- **Wall holder optional**
- **Increased actuating force optional**

3-stage function
Enabling function is only active in the second stage (middle position, actuating point). If the button is released or pushed further (panic function), the enabling is removed (dependent on the wiring, see function sequence)

Cable
The high-quality connection cables (individual screening of the safety contacts) are available straight or coiled.

Suitable for direct connection to safety switch
This enabling switch can be connected directly to a safety switch (TZ…C1662) (see catalog for safety switches with metal housing).

Switching elements (see also page 8)
- **1110** 1 NO/NC ⊖ 1)
- **1210** 1 NO/NC ⊖ 1) + 1 NO
- **2210** 1 NO/NC ⊖ 1)
  1 NO (additional monitoring contact)
- **2220** 2 NO/NC ⊖ 1)

Cable lengths (coiled cable pulled out straight)

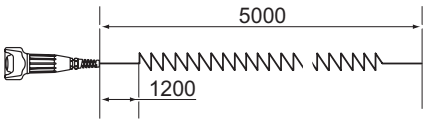

ZSA, 3-stage function
Flying lead

Dimension drawings

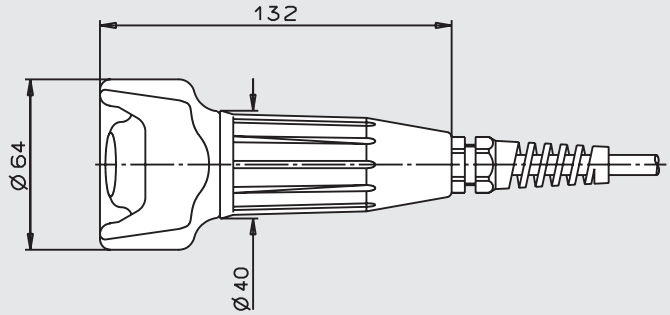

Wiring diagrams/function sequence

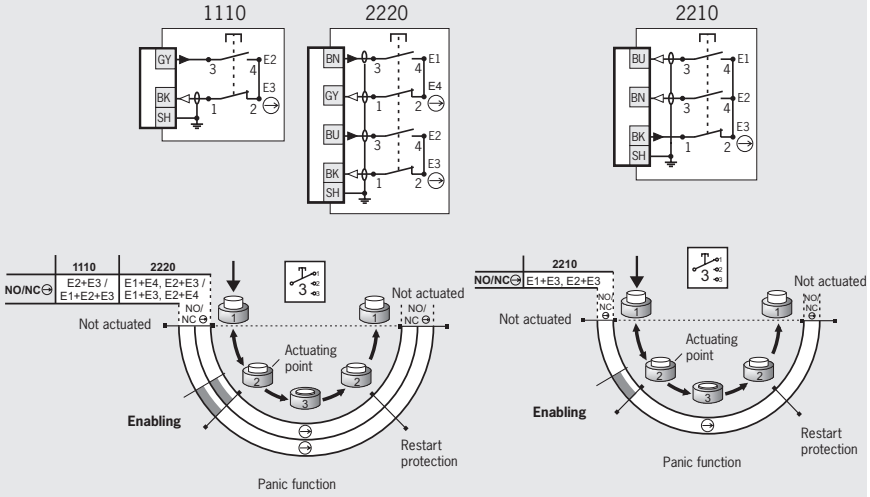

Contact
- open
- closed
- closed, enabling

Ordering table

Design	Connection/ cross-section	Cable length	Version	Switching element		
				1110: 1 NO/NC ⊖ 1)	**2210**: 1 NO/NC ⊖ 1) +1 NO	**2220**: 2 NO/NC ⊖ 1)
G1 3-stage	**Flying lead 8 x 0.34 mm²**	5 m straight		On request	On request	**072961** ZSA2B4G05A
		5 m coiled		On request	On request	**085118** ZSA2B4S05A
		10 m straight	Increased actuating force	**072759** 2) ZSA2B5G10AC1861	On request	On request
	Flying lead 3 x 0.75 mm²	5 m straight		On request	**055410** ZSA2B2G05A	-
		10 m straight		On request	**055411** ZSA2B2G10A	-

1) Only closed in middle position, a normally open contact and a positively driven contact are combined internally.
2) No BG type examination

Subject to technical modifications; no responsibility is accepted for the accuracy of this information.

ZSA, 3-stage function
Plug connectors

Dimension drawings

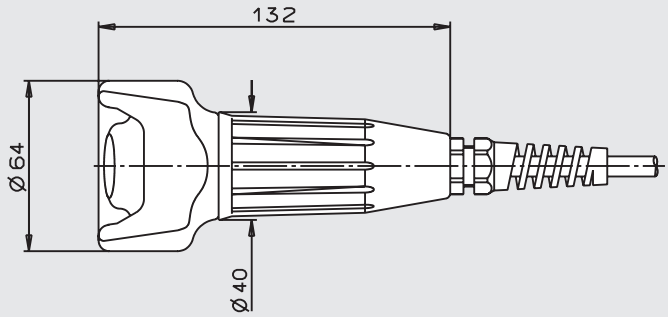

Male plug SS4 (4-pin)

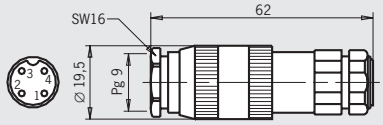

Male plug SVM5 (5-pin)

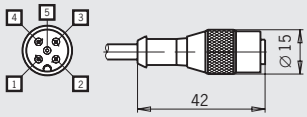

For mating connectors see page 36

View of connection side

Wiring diagrams/function sequence

1110 SS4

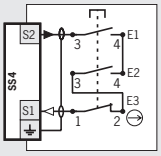

1210 SVM5

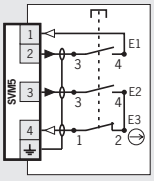

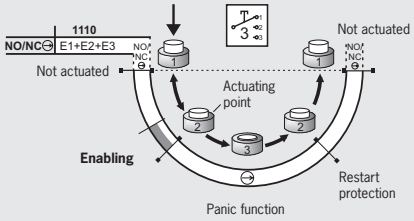

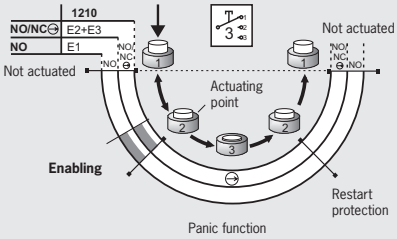

Contact
- open
- closed
- closed, enabling

Ordering table

Design	Connection	Cable length	Version	Switching element	
				1110: 1 NO/NC ⊖ [1]	**1210**: 1 NO/NC ⊖ [1] +1 NO
G1 3-stage	**SS4** Plug connectors (4-pin)	5 m straight	Direct connection to TZ...C1662 with plug BD4	**057097** ZSA2B2G05B-C1662	-
		10 m straight	Direct connection to TZ...C1662 with plug BD4	**057098** ZSA2B2G10B-C1662	-
	SVM5 Plug connectors (5-pin)	15 m straight		On request	**072870** ZSA2B2G15CC1926
		25 m straight		On request	**086206** ZSA2B2G25CC1926

1) Only closed in middle position, a normally open contact and a positively driven contact are combined internally.

For technical data see page 71

Enabling switch ZSA

- **Housing G1**
- **3-stage function**
- **Single or dual-channel version**
- **Straight connection cable**
- **Plug connectors**
- **Direct connection to safety switch optional**
- **Increased actuating force optional**

3-stage function
Enabling function is only active in the second stage (middle position, actuating point). If the button is released or pushed further (panic function), the enabling is removed (dependent on the wiring, see function sequence).

Cable
The high quality connection cables (individual screening of the safety contacts) are available straight.

Suitable for direct connection to safety switch
This enabling switch can be connected directly to a safety switch (TZ…C1803) (see catalog for safety switches with metal housing).

Increased actuating force
A higher force is required on pressing through from stage 2 (enabling) to stage 3 (pressed through "panic function").

Switching elements (see also page 8)
- **210** 2 NO + 1 NC ⊖
- **220** 2 NO + 2 NC ⊖
- **2210** 1 NO/NC ⊖ 1)
  1 NO (additional monitoring contact)
- **2220** 2 NO/NC ⊖ 1)

ZSA, 3-stage function
Plug connectors

Dimension drawings

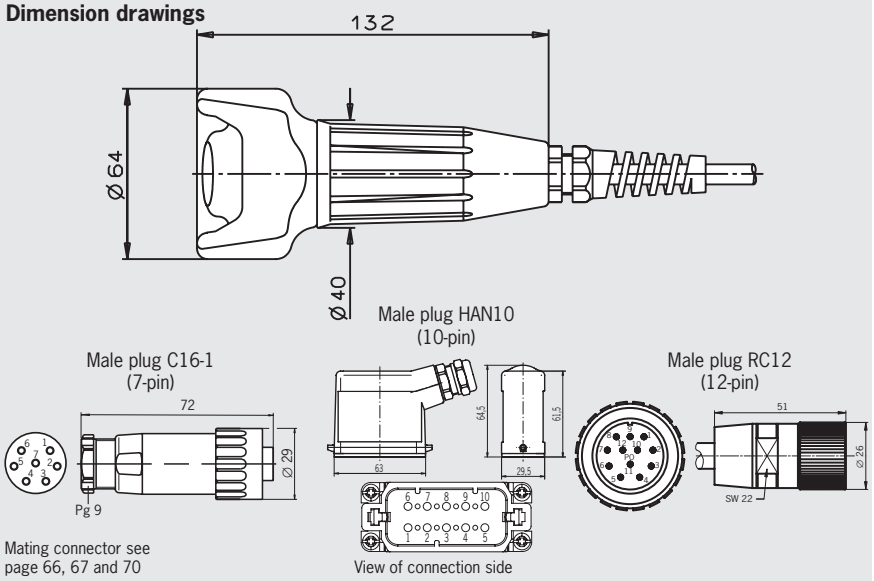

Wiring diagrams/function sequence

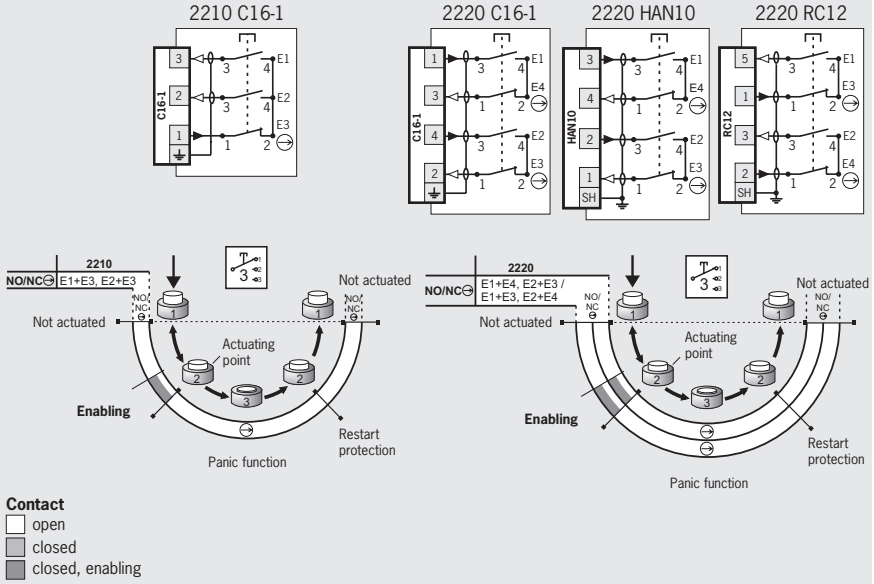

Ordering table

Design	Connection	Cable length	Version	Switching element	
				1110: 1 NO/NC ⊖ 1)	**1210**: 1 NO/NC ⊖ 1) +1 NO
G1 3-stage	**C16-1** 2) Plug connectors (7-pin)	10 m straight		**057100** ZSA2B2G10B	**070788** ZSA2B4G10B
		20 m straight		On request	**079870** ZSA2B4G20B
	HAN10 Plug connectors (10-pin)	10 m straight	Increased actuating force. Screen on plug on housing	On request	**077489** 3) ZSA2B4G10CC1830
	RC12 Plug connectors (12-pin)	5 m straight	Direct connection to TZ...C1803, screen on connector housing	On request	**092141** 3) 4) ZSA092141C2038
		15 m straight		On request	**097567** 3) 4) ZSA097567C2038
		15 m straight		On request	**099495** 3) 4) ZSA099459C2038
		25 m straight		On request	**100873** 3) 4) ZSA0100873C2038

1) Only closed in middle position, a normally open contact and a positively driven contact are combined internally.
2) Enabling switch connector compatible with safety switch NZ..VZ.C1420 or NZ..VZ.C1701 (see catalog for safety switches with metal housing).
3) No BG type examination
4) No cULus type examination

Subject to technical modifications; no responsibility is accepted for the accuracy of this information.

ZSA, 3-stage function
Plug connectors

Dimension drawings

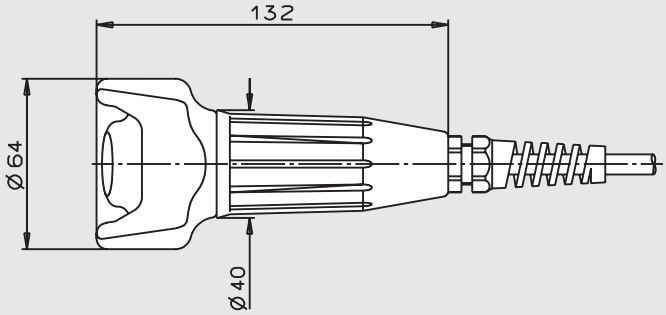

Male plug UT23
(23-pin)

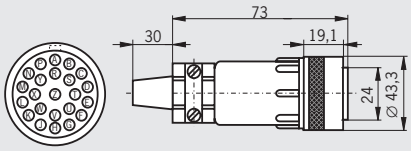

View of connection side

For mating connectors see page 68

Wiring diagrams/function sequence

210 UT23

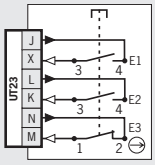

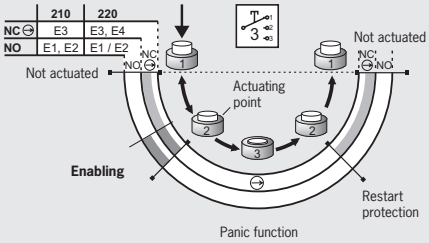

Contact
- open
- closed
- closed, enabling

Ordering table

Design	Connection	Cable length	Switching element	
			210: 2 NO + 1 NC ⊖	**220**: 2 NO + 2 NC ⊖
G1 3-stage	**UT23** Plug connectors (23-pin)	12 m straight	**070731** ZSA2A2L12CC1725	On request

For technical data see page 71

Enabling switches ZSA and ZSB

- **Housing G1**
- **3-stage function**
- **Dual-channel version**
- **Straight connection cable**
- **Plug connector optional**
- **LED and/or buttons optional**

3-stage function
Enabling function is only active in the second stage (middle position, actuating point). If the button is released or pushed further (panic function), the enabling is removed (dependent on the wiring, see function sequence).

Cable
The high quality connection cables (individual screening of the safety contacts) are available straight.

LEDs
The LEDs are used for visual feedback direct at the enabling switch.

+ and – buttons
These buttons can be configured individually. For example, for moving axes in positive or negative direction.

Switching elements (see also page 8)
- **210** 2 NO + 1 NC ⊖
- **220** 2 NO + 2 NC ⊖
- **2220** 2 NO/NC ⊖ 1)

ZSA, 3-stage function
Plug connectors

Dimension drawings

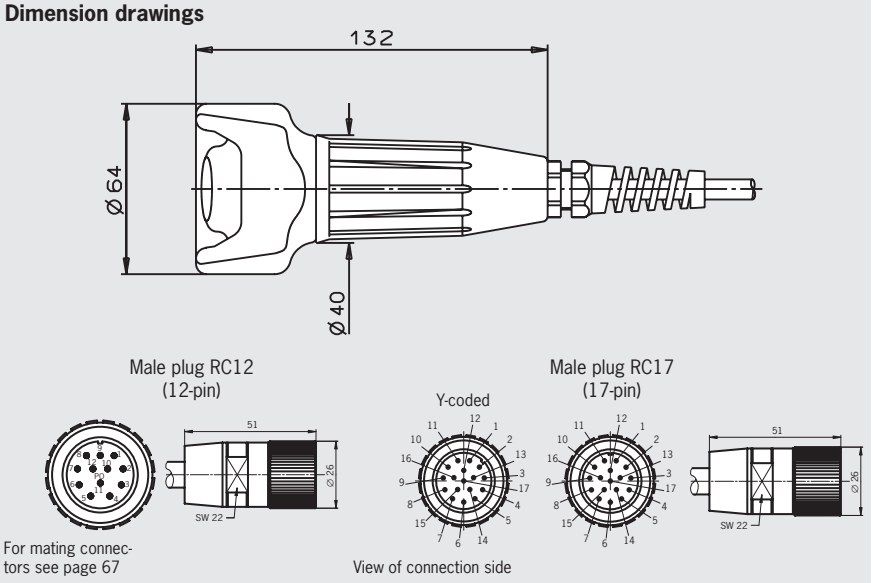

Wiring diagrams/function sequence

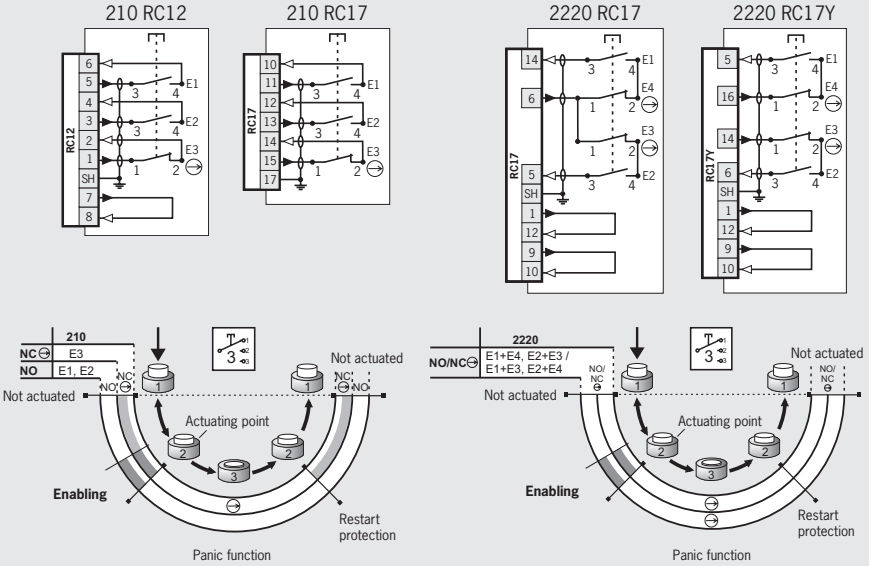

Contact
- open
- closed
- closed, enabling

Ordering table

Design	Connection	Cable length	Version	Switching element	
				210: 2 NO + 1 NC ⊖	**2220**: 2 NO/NC ⊖ 1)
G1 3-stage	**RC12** Plug connectors (12-pin)	5 m straight	Screen on connector housing	**073289** ZSA2AG05CC1770	On request
	RC17 Plug connectors (17-pin)	5 m straight		**070741** ZSA2A2G05CC1714	On request
			Suitable for Siemens panel PP031 (1-channel), screen on connector housing	On request	**092738** ZSA2A4G05C-C2041
	RC17 Plug connectors Y-coded (17-pin)	5 m straight	Suitable for Siemens panel PP012 and PP031 (2-channel), screen on connector housing	On request	**092141** ZSA2A4G05C-C2032

1) Only closed in middle position, a normally open contact and a positively driven contact are combined internally.

Subject to technical modifications; no responsibility is accepted for the accuracy of this information.

ZSB, 3-stage function
Flying lead

Dimension drawings

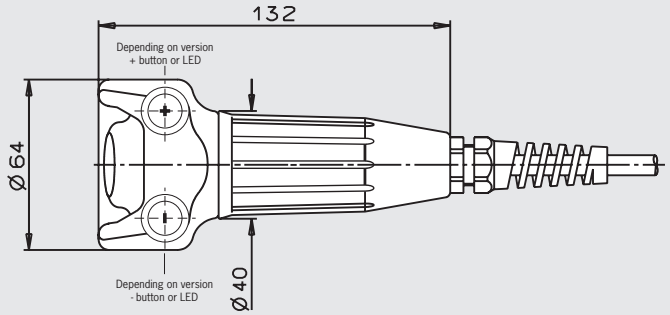

Wiring diagrams/function sequence

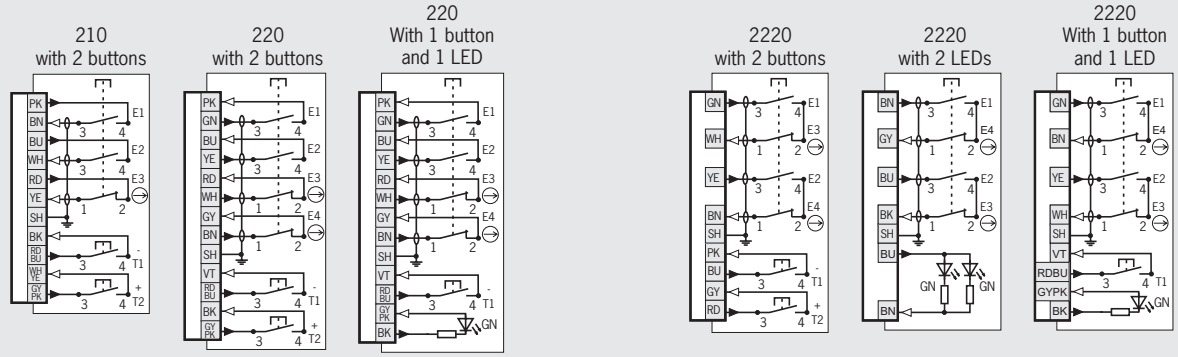

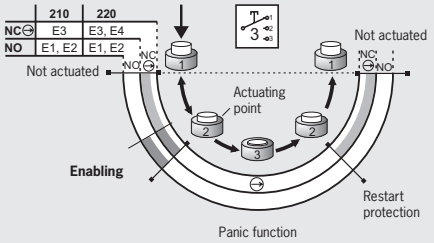

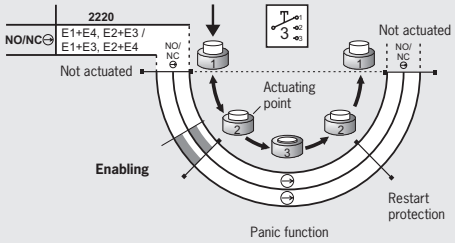

Contact
- open
- closed
- closed, enabling

Ordering table

Design	Connection/ cross-section	Cable length	Version	Switching element		
				210: 2 NO + 1 NC	**220**: 2 NO + 2 NC	**2220**: 2 NO/NC 1)
G1 3-stage	**Flying lead 8 x 0.34 mm²**	10 m straight	2 LEDs (gn)	On request	On request	**086707** 2) 3) ZSA086707C1983
		15 m straight	2 LEDs (gn)	On request	On request	**072969** 2) 3) ZSA072969C1983
	Flying lead 8 x 0.5 mm² + 8 x 0.14 mm²	5 m straight	1 button, 1 LED (gn)	On request	**085126** 2) 3) ZSB085126	**106112** ZSB2B4G05A-C2277
		5 m straight	2 buttons (+ and -)	**073260** ZSB2A2G05A	**083317** 2) 3) ZSB083317	**092378** 2) 3) ZSB092378
		10 m straight	2 buttons (+ and -)	**073261** ZSB2A2G10A	On request	On request
		15 m straight	2 buttons (+ and -)	**095612** ZSB2A2G15A	On request	On request
		20 m straight	2 buttons (+ and -)	On request	**096900** 3) ZSB096900	On request
		7 m coiled	1 button, 1 LED (gn)	On request	**109470** 2) ZSB2A4S06A-C2302	On request
		8 m coiled	2 buttons (+ and -)	On request	**103161** 3) ZSB103161	On request
		22 m coiled	2 buttons (+ and -)	On request	On request	**109136** ZSB2B4S22A

1) Only closed in middle position, a normally open contact and a positively driven contact are combined internally.
2) No BG type examination
3) No cULus type examination

For technical data see page 71

Enabling switches ZSA and ZSB

- **Housing G1**
- **3-stage function**
- **Dual-channel version**
- **Straight connection cable optional**
- **Plug connectors**
- **LED and/or buttons optional**
- **Actuator for safety switch NZ.VZ or TZ optional**

3-stage function
Enabling function is only active in the second stage (middle position, actuating point). If the button is released or pushed further (panic function), the enabling is removed (dependent on the wiring, see function sequence).

Cable
The high quality connection cables (individual screening of the safety contacts) are available straight.

LEDs
The LEDs are used for visual feedback direct at the enabling switch.

+ and – buttons
These buttons can be configured individually. For example, for moving axes in positive or negative direction.

Suitable for direct connection to safety switch
This enabling switch can be connected directly to a safety switch (TZ…C1803) (see catalog for safety switches with metal housing).

Actuator
Suitable for safety switch NZ.VZ/TZ (see catalog for safety switches with metal housing). By using an appropriate safety switch as the holder for the enabling switch, the position of the enabling switch can be safely sampled. By suitable integration of this combination, the signal from the safety switch can be used, e.g. as an operating mode selector switch when the actuator is removed (removal of the enabling switch).

Switching elements (see also page 8)
- **210** 2 NO + 1 NC ⊖
- **2220** 2 NO/NC ⊖ 1)

ZSA, 3-stage function
Plug connectors

Dimension drawings

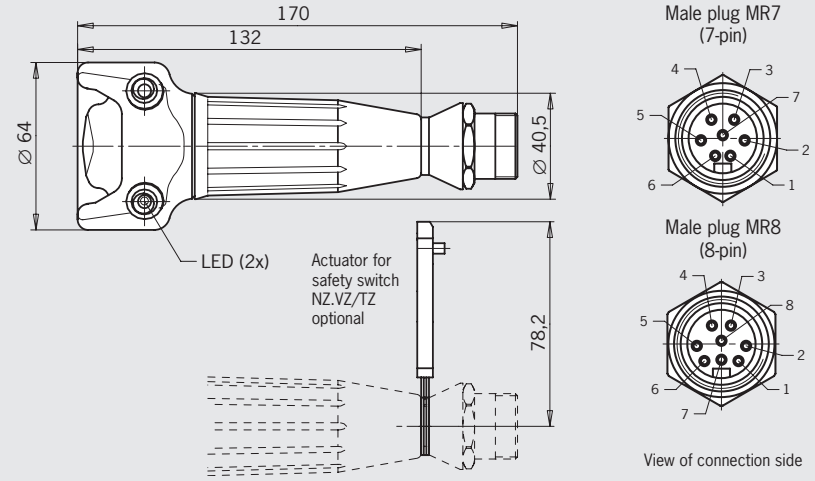

For mating connectors see page 70

Wiring diagrams/function sequence

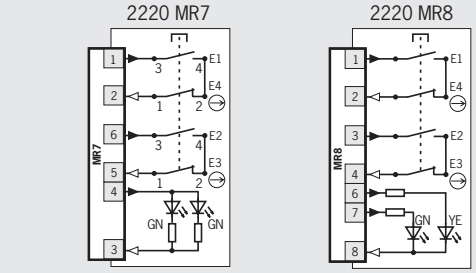

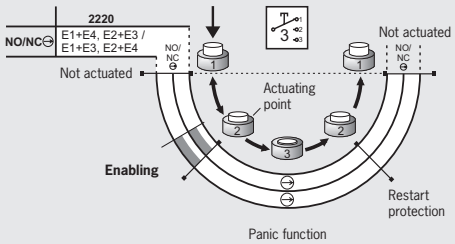

Contact
- open
- closed
- closed, enabling

Ordering table

Design	Connection	Cable length	Version	Switching element **2220**: 2 NO/NC ⊖ 1)
G1 3-stage	**MR7** Plug connectors (7-pin)	-	2 LEDs (gn)	**085114** ZSA085114C1968
		-	2 LEDs (gn), with actuator for safety switch NZ.VZ/TZ	**072887** ZSA072887-C1932
	MR8 Plug connectors (8-pin)	-	2 LEDs (gn + ye), with actuator for safety switch NZ.VZ/TZ	**086681** ZSA086681C1979

1) Only closed in middle position, a normally open contact and a positively driven contact are combined internally.

Subject to technical modifications; no responsibility is accepted for the accuracy of this information.

ZSB, 3-stage function
Plug connectors

Dimension drawings

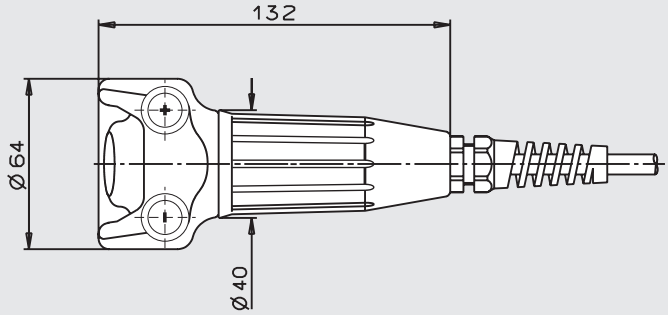

Female connector BS12 (12-pin)

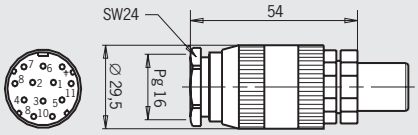

Male plug PC12 (12-pin)

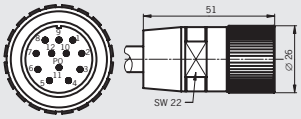

Male plug RC17 Y-coded (17-pin)

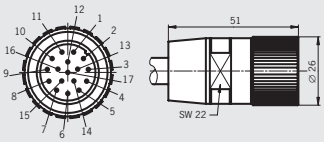

For mating connectors
see page 66 and 67

View of connection side

Wiring diagrams/function sequence

210 BS12

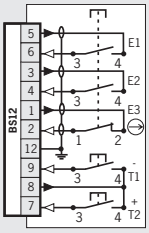

210 RC12

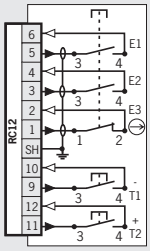

2220 RC12

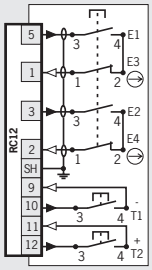

2220 RC17Y

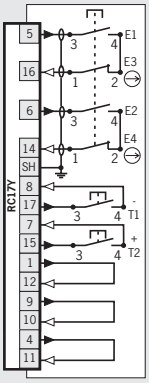

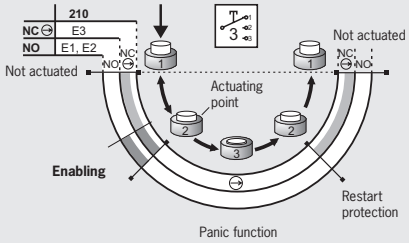

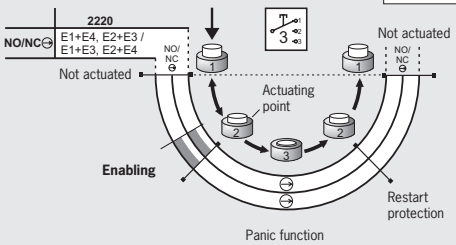

Contact
- open
- closed
- closed, enabling

Ordering table

Design	Connection	Cable length	Version	Switching element	
				210: 2 NO + 1 NC ⊖	**2220**: 2 NO/NC ⊖ 1)
G1 3-stage	**BS12** Plug connectors (12-pin)	5 m straight	2 buttons (+ and -)	**079832** 2) 3) ZSB079832	On request
	RC12 Plug connectors (12-pin)	5 m straight	2 buttons (+ and -), screen on connector housing	**073264** ZSB2A2G05C	On request
		5 m straight	2 buttons (+ and -), direct connection TZ...C1803, screen on connector housing	On request	**077040** 2) 3) ZSB077040
		10 m straight	2 buttons (+ and -), screen on connector housing	**073265** ZSB2A2G10C	On request
	RC17 Plug connectors Y-coded (17-pin)	5 m straight	2 buttons (+ and -), screen on connector housing	On request	**092996** 2) ZSB2B4G05C-C2044

1) Only closed in middle position, a normally open contact and a positively driven contact are combined internally.
2) No BG type examination
3) No cULus type examination

For technical data see page 71

Enabling switch ZSR

- **3-stage function**
- **Single or dual-channel version**
- **Housing G2**
- **Straight connection cable**
- **Plug connector optional**
- **Including holder**

3-stage function
Enabling function is only active in the second stage (middle position, actuating point). If the button is released or pushed further (panic function), the enabling is removed (dependent on the wiring, see function sequence).

Cable
The high quality connection cables (individual screening of the safety contacts) are available straight.

Switching elements (see also page 8)
- **111** 1 NO + 1 NC ⊖ + 1 NC
- **210** 2 NO + 1 NC ⊖
- **220** 2 NO + 2 NC ⊖
- **1110** 1 NO/NC ⊖ 1)
- **2210** 1 NO/NC ⊖ 1)
  1 NO (additional monitoring contact)

Cable lengths (coiled cable pulled out straight)

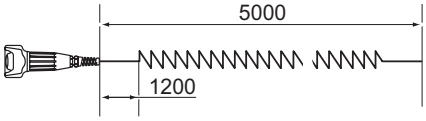

ZSR, 3-stage function
Flying lead

Dimension drawings

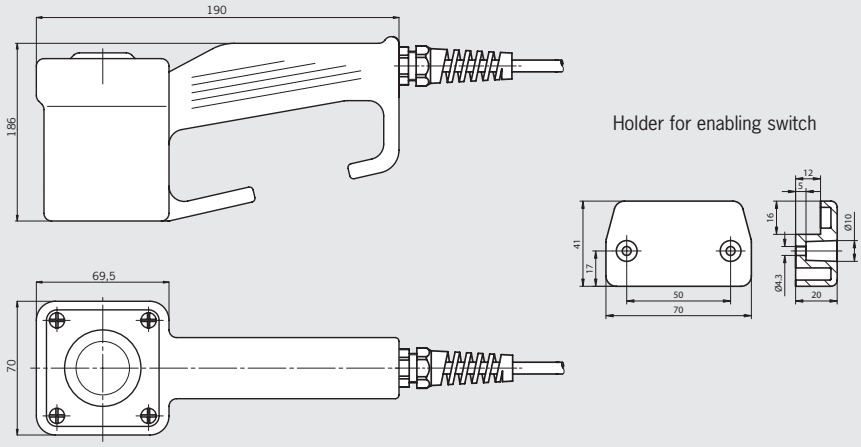

Wiring diagrams/function sequence

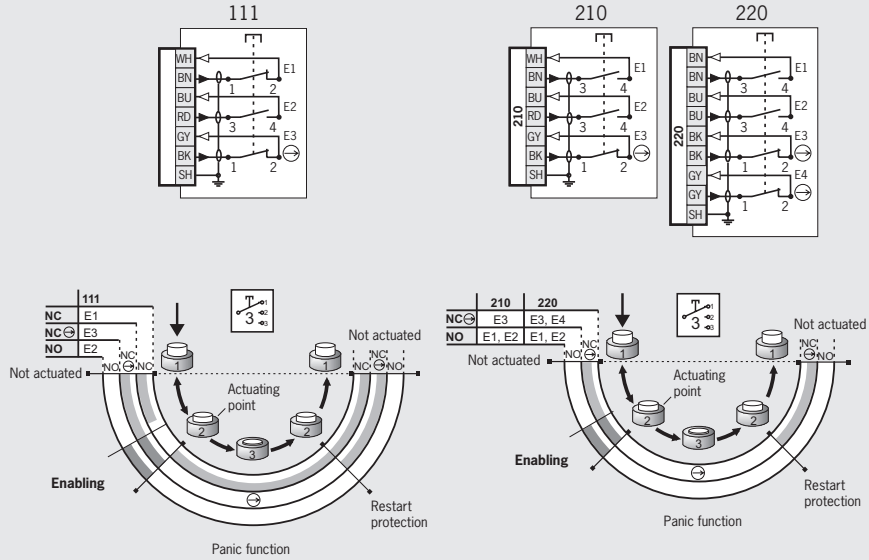

Contact
- open
- closed
- closed, enabling

Ordering table

Design	Connection/ cross-section	Cable length	Switching element		
			111: 1 NO + 1 NC ⊖ +1 NC	**210**: 2 NO + 1 NC ⊖	**220**: 2 NO + 2 NC ⊖
G2 3-stage	**Flying lead 6 x 0.34 mm²**	5 m straight	**055423** ZSR2A1G05A	**055427** ZSR2A2G05A	-
		10 m straight	**055424** ZSR2A1G10A	**055428** ZSR2A2G10A	-
		5 m coiled	**055425** ZSR2A1S05A	**055429** ZSR2A2S05A	-
	Flying lead 8 x 0.34 mm²	5 m straight	-	-	**097609** ZSR2A4G05A
		5 m coiled	-	-	**104085** ZSR2A4S05A

1) Only closed in middle position, a normally open contact and a positively driven contact are combined internally.

Subject to technical modifications; no responsibility is accepted for the accuracy of this information.

ZSR, 3-stage function
Flying lead

Dimension drawings

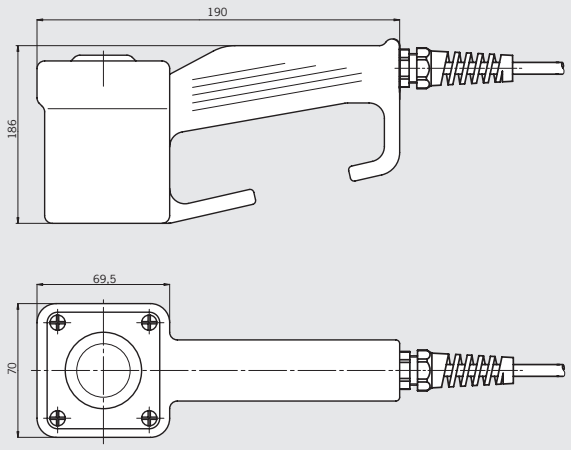

Holder for enabling switch

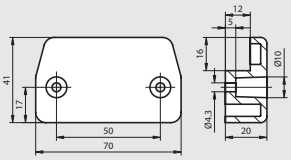

Wiring diagrams/function sequence

2210

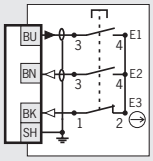

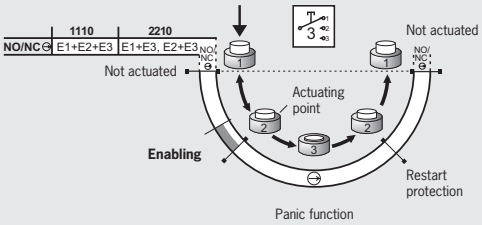

Contact
- open
- closed
- closed, enabling

Ordering table

Design	Connection/ cross-section	Cable length	Switching element	
			1110: 1 NO/NC ⊖ 1)	**2210**: 1 NO/NC ⊖ 1) + 1 NO
G2 3-stage	**Flying lead 3 x 0.75 mm²**	5 m straight	On request	**055431** ZSR2B2G05A
		10 m straight	On request	**055432** ZSR2B2G10A

1) Only closed in middle position, a normally open contact and a positively driven contact are combined internally.

For technical data see page 71

Enabling switch ZSB

- **3-stage function**
- **Dual-channel version**
- **Housing G3**
- **Coiled connection cable**
- **Two illuminated buttons**
- **Including holder**

3-stage function
Enabling function is only active in the second stage (middle position, actuating point). If the button is released or pushed further (panic function), the enabling is removed (dependent on the wiring, see function sequence).

Cable
The high-quality connection cables (individual screening of the safety contacts) are available coiled.

Illuminated + and – buttons
These buttons can be configured individually. For example, for moving axes in positive or negative direction.

Switching elements (see also page 8)
- **210** 2 NO + 1 NC ⊖

Cable lengths (coiled cable pulled out straight)

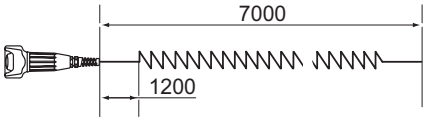

ZSB, 3-stage function
Flying lead

Dimension drawings

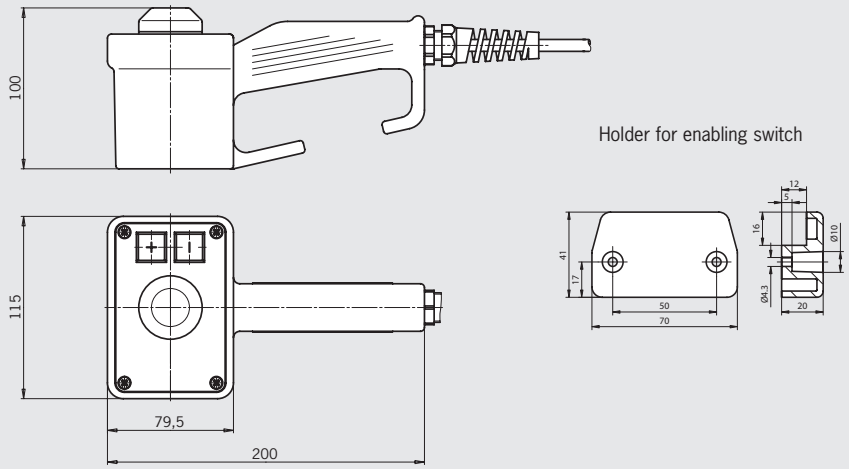

Wiring diagrams/function sequence

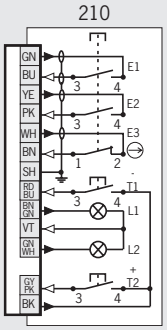

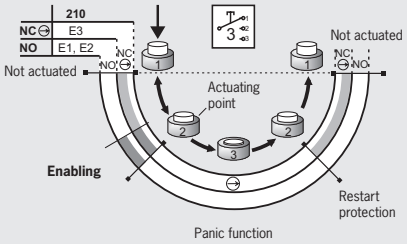

Contact
- open
- closed
- closed, enabling

Ordering table

Design	Connection/ cross-section	Cable length	Version	Switching element
				210: 2 NO + 1 NC ⊖
G3 3-stage	**Flying lead 8 x 0.5 mm² + 8 x 0.14 mm²**	7 m coiled	2 illuminated buttons (+ and -)	**054784** ZSB054784

Subject to technical modifications; no responsibility is accepted for the accuracy of this information.

Enabling switch ZSB

- **3-stage function**
- **Dual-channel version**
- **Housing G3**
- **Connection cable straight or coiled**
- **Plug connectors**
- **Two illuminated buttons**

3-stage function
Enabling function is only active in the second stage (middle position, actuating point). If the button is released or pushed further (panic function), the enabling is removed (dependent on the wiring, see function sequence).

Cable
The high-quality connection cables (individual screening of the safety contacts) are available straight or coiled.

Illuminated + and – buttons
These buttons can be configured individually. For example, for moving axes in positive or negative direction.

Switching elements (see also page 8)
- **220** 2 NO + 2 NC ⊖
- **2220** 2 NO/NC ⊖ 1)

Cable lengths (coiled cable pulled out straight)

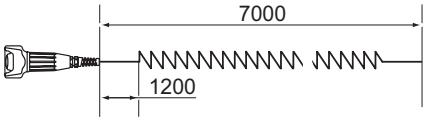

ZSB, 3-stage function
Plug connectors

Dimension drawings

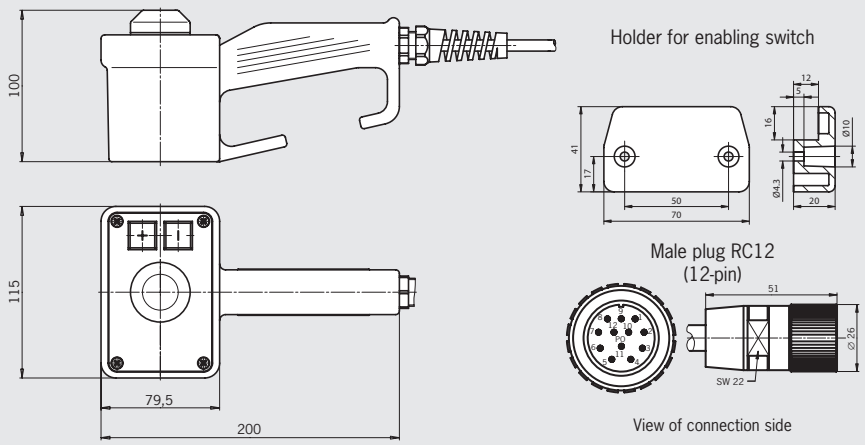

For mating connectors see page 67

Wiring diagrams/function sequence

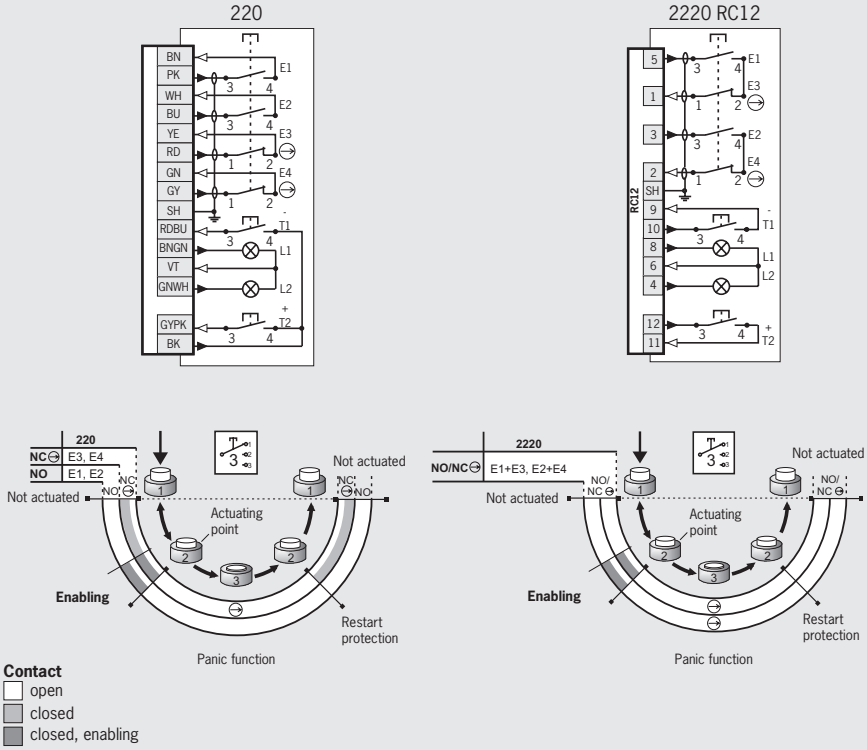

Ordering table

Design	Connection/ cross-section	Cable length	Version	Switching element	
				220: 2 NO + 2 NC ⊖	**2220**: 2 NO/NC ⊖ 1)
G3 3-stage	**Flying lead 4 x 0.5 mm² + 4 x 0.5 mm² + 8 x 0.14 mm²**	7 m coiled	2 illuminated buttons (+ and -)	**100570** ZSB100570	On request
	RC12 Plug connectors (12-pin)	5 m straight	2 illuminated buttons (+ and -)	-	**077029** ZSB077029
		12 m straight	2 illuminated buttons (+ and -)	-	**085058** ZSB085058

1) Only closed in middle position, a normally open contact and a positively driven contact are combined internally.

For technical data see page 71

Enabling switch ZSB

- **3-stage function**
- **Dual-channel version**
- **Housing G3**
- **Connection cable straight or coiled**
- **Plug connectors**
- **Two illuminated buttons**
- **Key-operated rotary switch or selector switch optional**
- **Including holder**

3-stage function
Enabling function is only active in the second stage (middle position, actuating point). If the button is released or pushed further (panic function), the enabling is removed (dependent on the wiring, see function sequence).

Cable
The high-quality connection cables (individual screening of the safety contacts) are available straight or coiled.

Illuminated + and – buttons
These buttons can be configured individually. For example, for moving axes in positive or negative direction.

Key-operated rotary switch
For individual use, e.g. as operating mode selector switch.

Selector switch (12-stage)
For the selection of different axes or ranges. All outputs are open between the switch positions on the selector switch (break-before-make switching)!

Switching elements (see also page 8)
- **210** 2 NO + 1 NC ⊖
- **2220** 2 NO/NC ⊖ 1)

ZSB, 3-stage function
Flying lead, key operated rotary switch or selector switch

Dimension drawings

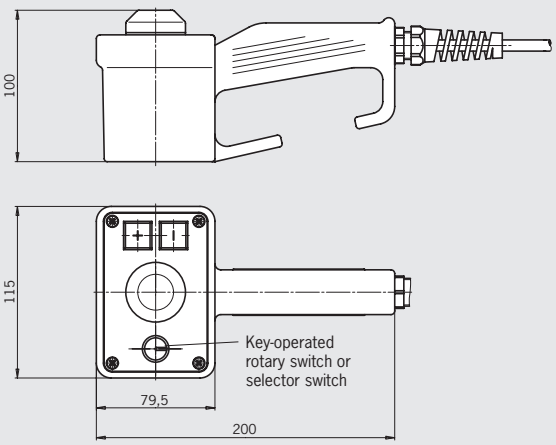

Holder for enabling switch

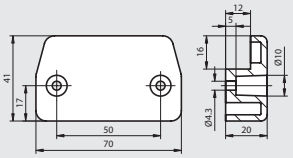

Switching table for selector switch (210 and 2220)

Item	BNYE	YEWH	VT	BK
	8	4	2	1
1	0	0	0	0
2	0	0	0	1
3	0	0	1	0
4	0	0	1	1
5	0	1	0	0
6	0	1	0	1
7	0	1	1	0
8	0	1	1	1
9	1	0	0	0
10	1	0	0	1
11	1	0	1	0
12	1	0	1	1

Wiring diagrams/function sequence

210 with key operated switch

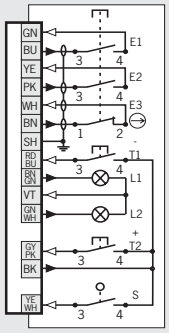

210 with selector switch

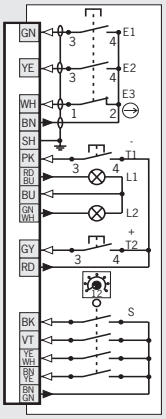

2220 with selector switch

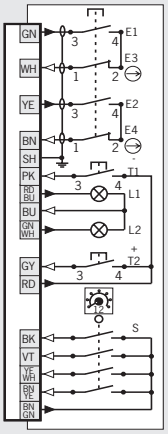

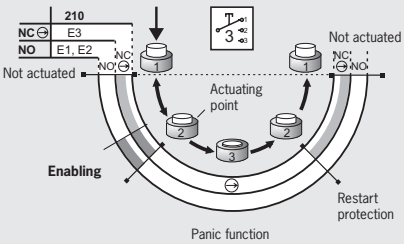

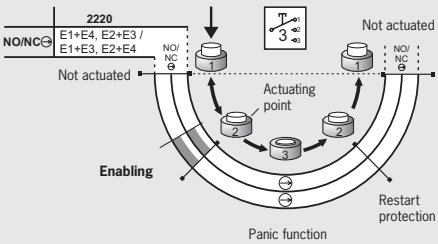

Contact
- open
- closed
- closed, enabling

Ordering table

Design	Connection/ cross-section	Cable length	Version	Switching element	
				210: 2 NO + 1 NC ⊖	**2220**: 2 NO/NC ⊖ 1)
G3 3-stage	**Flying lead 8 x 0.5 mm² + 8 x 0.14 mm²**	3 m straight	2 illuminated buttons (+ and -), 1 key-operated rotary switch	**077027** ZSB077027	On request
		10 m straight	2 illuminated buttons (+ and -), 1 selector switch	**070894** ZSB070894	**087821** ZSB087821

1) Only closed in middle position, a normally open contact and a positively driven contact are combined internally.

Subject to technical modifications; no responsibility is accepted for the accuracy of this information.

Enabling switch ZSB

- **3-stage function**
- **Dual-channel version**
- **Housing G3**
- **Straight connection cable**
- **Plug connectors**
- **Two illuminated buttons**
- **Key-operated rotary switch**
- **Including holder**

3-stage function
Enabling function is only active in the second stage (middle position, actuating point). If the button is released or pushed further (panic function), the enabling is removed (dependent on the wiring, see function sequence).

Cable
The high quality connection cables (individual screening of the safety contacts) are available straight.

Illuminated + and – buttons
These buttons can be configured individually. For example, for moving axes in positive or negative direction.

Key-operated rotary switch
For individual use, e.g. as operating mode selector switch.

Switching elements (see also page 8)
- **210** 2 NO + 1 NC ⊖

ZSB, 3-stage function
Plug connector, key-operated rotary switch

Dimension drawings

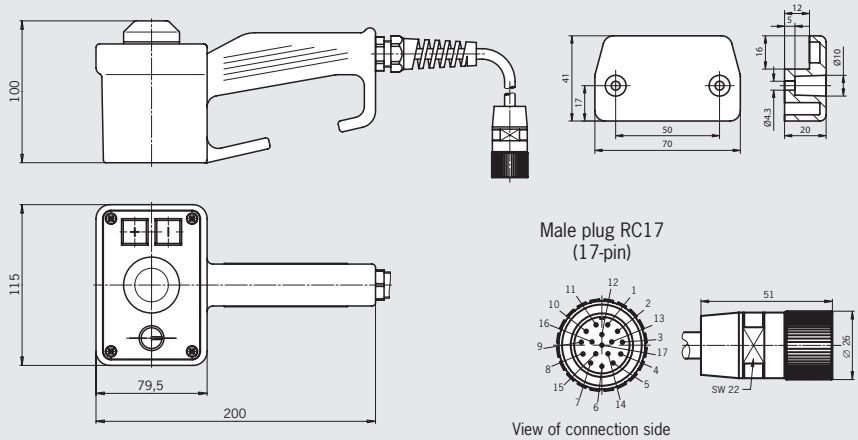

For mating connectors see page 67

Wiring diagrams/function sequence

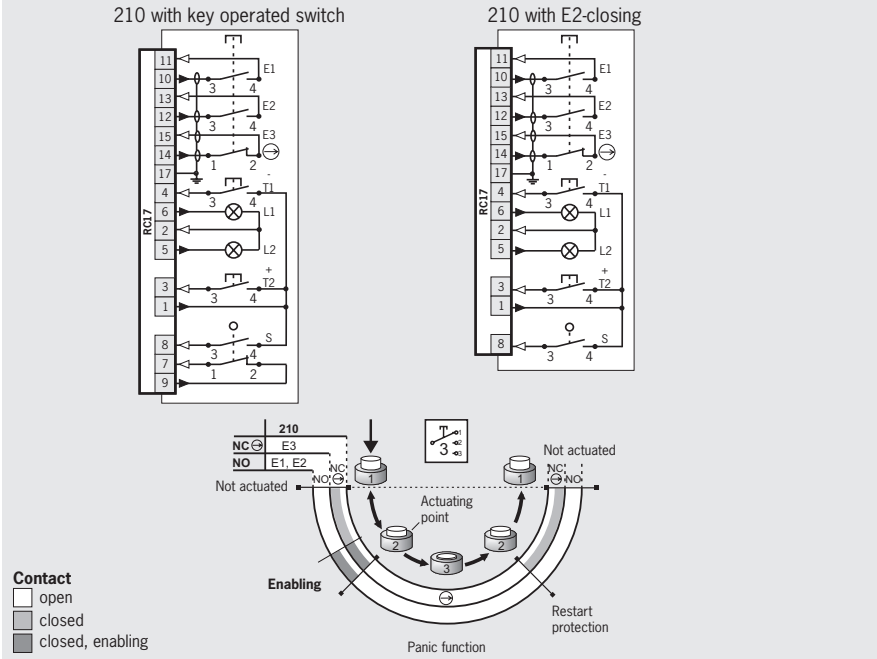

Ordering table

Design	Connection	Cable length	Version	Switching element **210**: 2 NO + 1 NC ⊖
G3 3-stage	**RC17** Plug connectors (17-pin)	3 m straight	2 illuminated buttons (+ and -), 1 key-operated rotary switch (1 NO)	**070904** ZSB070904
		5 m straight	2 illuminated buttons (+ and -), 1 key-operated rotary switch (1 NO)	**072645** ZSB072645
		12 m straight	2 illuminated buttons (+ and -), 1 key-operated rotary switch (1 NO)	**072403** ZSB072403
		12 m straight	2 illuminated buttons (+ and -), 1 key-operated rotary switch (1 NO, 1 NC)	**090262** ZSB090262
		3 m straight	2 illuminated buttons (+ and -), 1 key-operated rotary switch (1 NO), E2 lock [1]	**077059** ZSB077059
		5 m straight	2 illuminated buttons (+ and -), 1 key-operated rotary switch (1 NO), E2 lock [1]	**072711** ZSB072711

1) No key available

For technical data see page 71

Enabling switch ZSB

- **3-stage function**
- **Dual-channel version**
- **Housing G3**
- **Straight connection cable**
- **Plug connectors**
- **Two illuminated buttons**
- **Key-operated rotary switch**
- **Emergency stop device**
- **Including holder**

3-stage function
Enabling function is only active in the second stage (middle position, actuating point). If the button is released or pushed further (panic function), the enabling is removed (dependent on the wiring, see function sequence).

Cable
The high quality connection cables (individual screening of the safety contacts) are available straight.

Illuminated + and – buttons
These buttons can be configured individually. For example, for moving axes in positive or negative direction.

Key-operated rotary switch
For individual use, e.g. as operating mode selector switch.

Emergency stop device
Enabling switch with dual-channel emergency stop device on the switch housing, for various wiring concepts. Red emergency stop button.

Switching elements (see also page 8)
- **2220** 2 NO/NC ⊖ 1)

ZSB, 3-stage function
Plug connector, key-operated rotary switch, emergency stop device

Dimension drawings

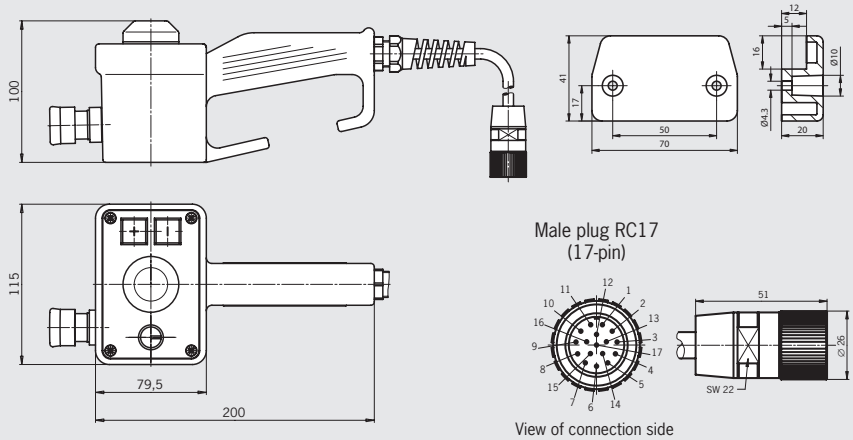

For mating connectors see page 37

Wiring diagrams/function sequence

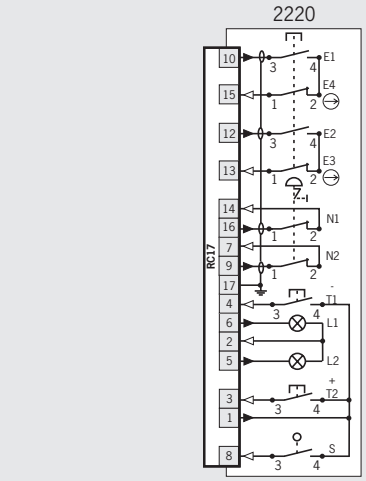

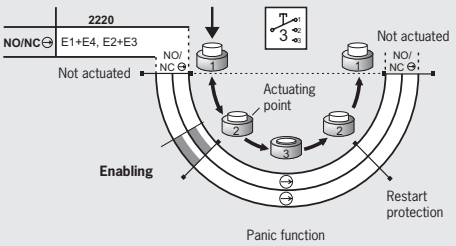

Contact
- open
- closed
- closed, enabling

Ordering table

Design	Connection	Cable length	Version	Switching element **2220**: 2 NO/NC ⊖ 1)
G3 3-stage	**RC17** Plug connectors (17-pin)	5 m straight	2 illuminated buttons (+ and -), 1 key-operated rotary switch (1 NO), 1 emergency stop device	**090489** ZSB090489

Subject to technical modifications; no responsibility is accepted for the accuracy of this information.

Selection table for enabling devices ZSG and ZSA

Design

E	Built-in version (without cable)
G1	Housing G1 (black)

Function

3	3-stage (OFF - enabling - OFF)

Connection

C	Tab connector, screw terminal, flying lead

Enabling switch ZSG
Housing G3

Enabling switch ZSA
Housing G1

Design E	Design G1	Stages 2	Connection C		Page
●		●	●		50
	●	●	●		51

Built-in enabling device ZSG

- **2-stage function**
- **Dual-channel version**
- **Suitable, e.g., for hand-held pendant stations HBL**

2-stage function [2]
Enabling function is active in the second stage (pressed position). When the button is released, the enabling is removed (see function sequence).

Hand-held pendant station HBL
See catalog for hand-held pendant stations.

Switching elements (see also page 8)
- **20** 2 NO

ZSG, 2-stage function [2]
Tab connector

Dimension drawings

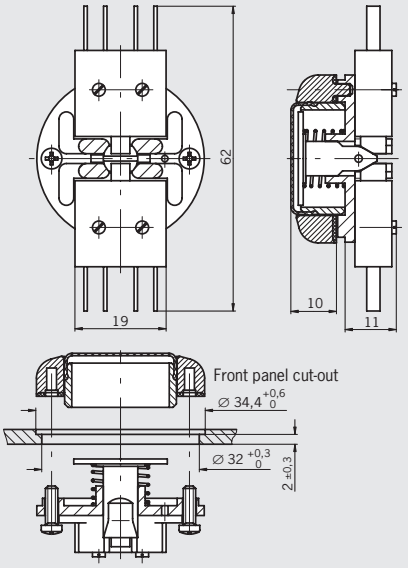

Wiring diagrams/function sequence

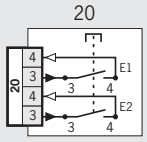

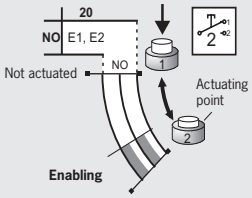

Contact
- open
- closed
- closed, enabling

Ordering table

Design	Connection	Version	Switching element **20**: 2NO
Built-in 2-stage [2] **ZSG**	**Tab connector**	Suitable, e.g., for hand-held pendant stations HBL	**070793** ZSG1-2

1) Only closed in middle position, a normally open contact and a normally closed contact are combined internally.
2) As per VDI 2854, a device comparable to an emergency stop device must be fitted!

Subject to technical modifications; no responsibility is accepted for the accuracy of this information.

Enabling devices ZSA

- **Housing G1**
- **2-stage function**
- **Single or dual-channel version**
- **Connection cable straight or coiled**
- **Wall holder optional**

2-stage function [1)]
Enabling function is active in the second stage (pressed position). When the button is released, the enabling is removed (see function sequence).

Cable
The high-quality connection cables (individual screening of the safety contacts) are available straight or coiled.

Switching elements (see also page 8)
- **10** 1 NO
- **20** 2 NO
- **21** 2 NO + 1 NC

Cable lengths (coiled cable pulled out straight)

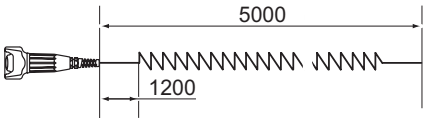

ZSA, 2-stage function [1)]
Flying lead

Dimension drawings

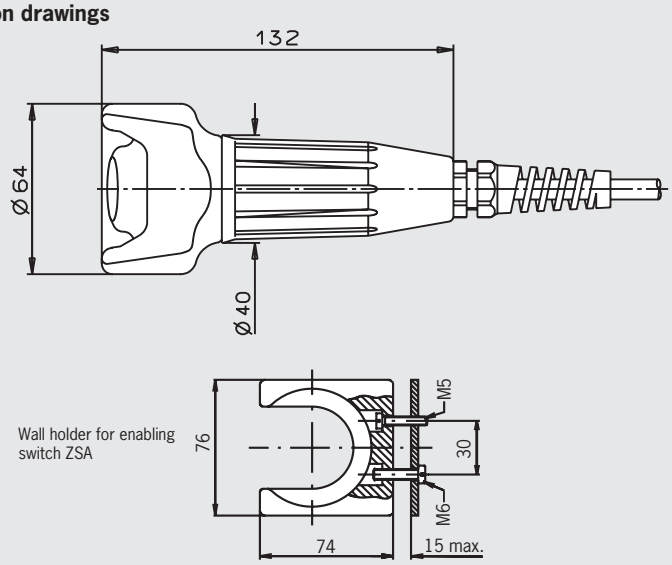

Wiring diagrams/function sequence

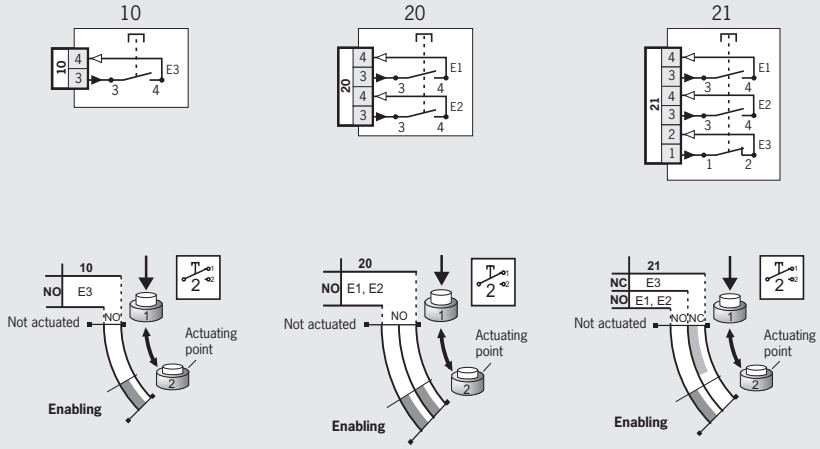

Contact
- open
- closed
- closed, enabling

Ordering table

Design	Connection/ cross-section	Cable length	Version	Switching element		
				10: 1NO	**20**: 2NO	**21**: 2 NO + 1 NC
G1 2-stage [1)]	**Flying lead 6 x 0.34 mm²**	2.5 m straight	Incl. wall holder	On request	**082557** ZSA1A2L25AC1909	On request
		5 m coiled		On request	On request	**094321** ZSA1A2S05A
	Flying lead 3 x 0.75 mm²	1 m straight	Incl. wall holder	-	-	**104231** ZSA1A2G01AC2246
		5 m straight		**082524** ZSA1A5G05AC1917	-	-
		7 m straight		-	**097909** ZSA1A2G07A	-
		10 m straight		**095144** ZSA1A5G10AC1917	-	-

1) As per VDI 2854, a device comparable to an emergency stop device must be fitted!

For technical data see page 71

Subject to technical modifications; no responsibility is accepted for the accuracy of this information.

Kits for enabling switches/enabling devices

Kit for enabling switch ZSM

Kit for enabling switch ZSA

Kit for enabling device ZSA

Kit Enabling switch ZSM	Kit Enabling switch ZSA	Kit Enabling device ZSA	Page
●			54 - 58
	●		59/60
		●	61

ZSM housing

- **3-stage function**
- **+ and – buttons optional**
- **Hole for lower stop command device**
- **Cable gland included**

3-stage function
Enabling function is only active in the second stage (middle position, actuating point). If the button is released or pushed further (panic function), the enabling is removed (dependent on the wiring, see function sequence).

+ and – buttons
These buttons can be individually assigned, e.g. to move axes in positive or negative direction.

ZSM4200-106104, 3-stage function

Dimension drawing

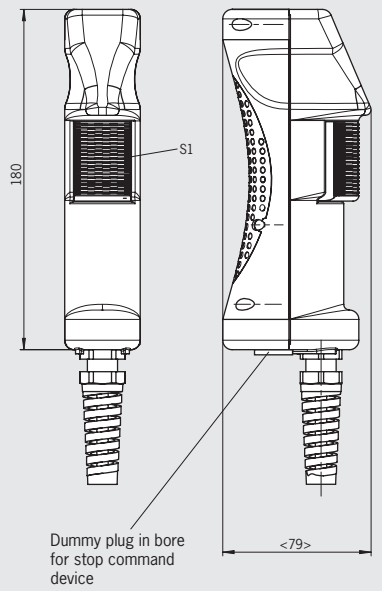

ZSM4200-106105, 3-stage function
+ and – buttons

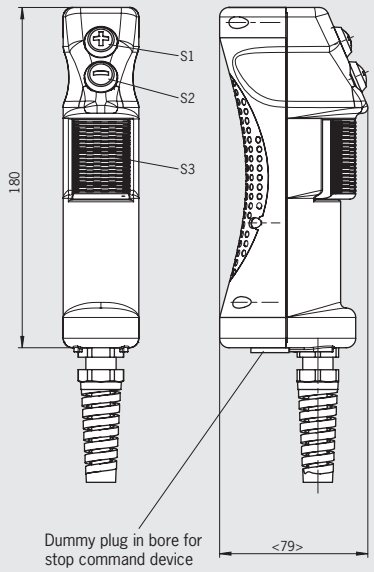

Wiring diagram/function sequence

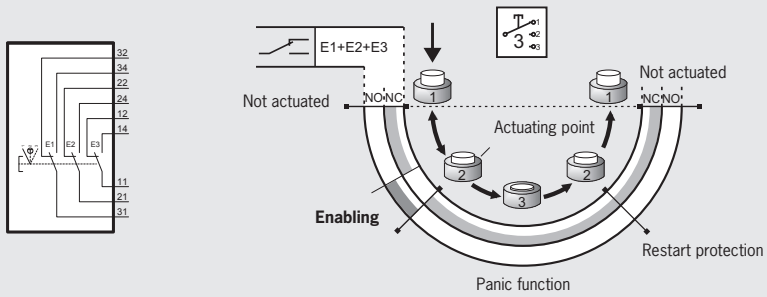

Ordering table

Design	Version	Order No./item
ZSM	Enabling switch with 3 changeover contacts (S1), cable gland included	**106104** ZSM4200-106104
	Enabling switch with 3 changeover contacts (S3), +/– buttons with one NO contact each (S1/S2), cable gland included	**106105** ZSM4200-106105

Subject to technical modifications; no responsibility is accepted for the accuracy of this information.

Accessories for installation in ZSM housing

- **Machine stop**
- **Emergency stop device**

Machine stop
Machine stop (black, with pull-to-reset button) for installation in housing ZSM, for different wiring concepts.

Emergency stop device
Two-channel emergency stop device (red, with pull-to-reset button) for installation in ZSM housing, for different wiring concepts.

Dimension drawing

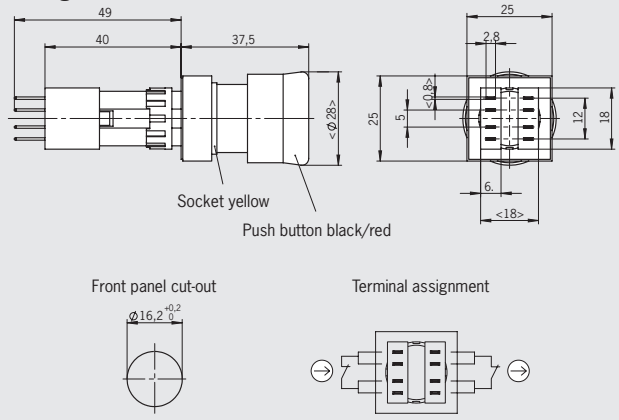

Parameter	Value
Color of actuating head	black/red
Color of bottom shell	yellow
Reset	Pull-to-reset button
Degree of protection	IP 65
Max. number of switching elements	2
Contact element	2 x positively driven contact
Utilization category acc. to IEC 947-5-1	DC-13 I_e 3 A U_e 24 V

Ordering table

Designation	Version	Order No./item
Machine stop	Installation ∅ 16 mm, palm button black ∅ 28 mm	**106434** Machine stop 16 mm
Emergency stop device	Installation ∅ 16 mm, palm button red ∅ 28 mm	**096298** Emergency stop 16 mm

Emergency stop device with small installation depth
Two-channel emergency stop device (red, with pull-to-reset button and turn-to-reset button) for installation in ZSM housing, for different wiring concepts.

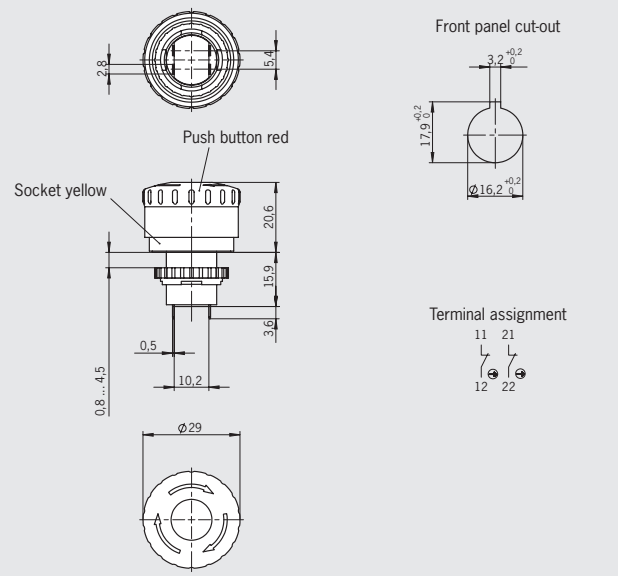

Parameter	Value
Color of actuating head	red
Color of bottom shell	yellow
Reset	Pull-to-reset button and turn-to-reset button
Degree of protection	IP 65
Number of switching elements	2
Contact element	2 x positively driven contact
Utilization category acc. to IEC 947-5-1	DC-13 I_e 3 A U_e 24 V

Ordering table

Designation	Version	Order No./item
Emergency stop device with small installation depth	Installation ∅ 16 mm, palm button red ∅ 29 mm	**106435** ES-XA1E-BV3UU02R

For technical data see page 71

- **LED indicator**
- **Female plug RC17**
- **Male flange connector RC17**

LED indicator
The LED indicator is used for visual feedback directly at the enabling switch.

Dimension drawing

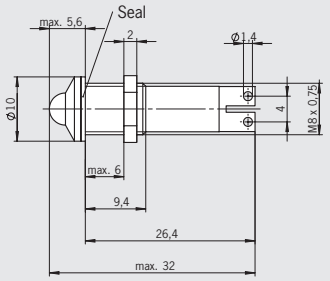

Parameter	Value
Housing	Chrome-plated
Operating voltage	24 V
Color	yellow

Ordering table

Designation	Version	Order No./item
LED indicator	Color yellow	**106347** LED indicator GE 106347

Female plug RC17
Female connector for hand-held enabling switches.

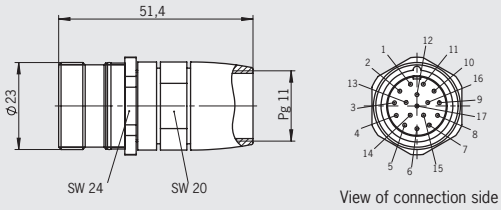

Male flange connector RC17
For connection, e.g. to enabling switches, pre-assembled.

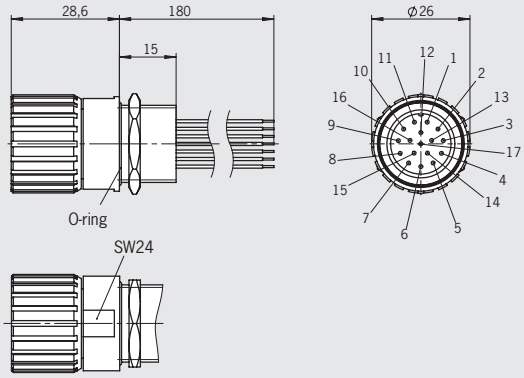

Parameter	Value	
Housing material	Metal	
Number of pins	12 (screen on the housing)	
	Male plug	Flange connector
Cable diameter max.	10 mm	-
Connection	Crimp contacts 0.14 ... 0.56 mm²	Soldered connections 1.0 mm²
Nominal voltage max.	230 V AC/DC	
Degree of protection acc. to IEC 60529 (inserted)	IP 67	

Ordering table

Item	Connection	Version	Order No./item
RC17 17-pin	Crimp contact	Female connector	**106349** Female connector 17-pin
		Male flange connector with wires, pre-assembled	**106360** Male flange connector 17-pin

Subject to technical modifications; no responsibility is accepted for the accuracy of this information.

- **Pushbutton**
- **Key-operated switch**

Dimension drawing

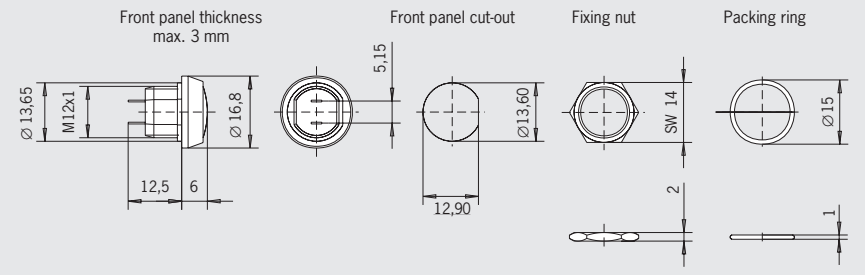

Parameter	Value
Ambient temperature	-25 ... +70 °C
Front degree of protection (integrated in front plate)	IP 67
Switching principle	Button, snap-action switching element
Switching elements	1 NO contacts
Switching voltage	DC 30 V
Switching current max.	100 mA
Connection	Soldered connection

Ordering table

Designation	Button color	Order No.
Pushbutton	Black	**083640**
	red	**086753**
	green	**086754**
	blue	**086757**
	white	**086755**
	yellow	**086756**

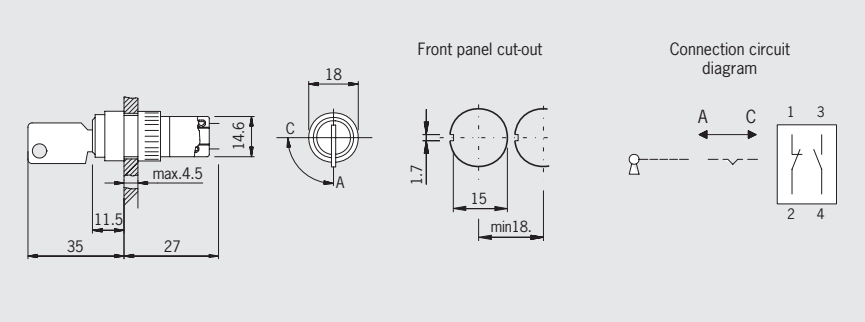

Parameter	Value
Ambient temperature	-25 ... +55 °C
Front degree of protection (integrated in front panel) / NEMA	IP 65 / 250-12
Switching principle	Snap-action switching element
Switching elements	1 NC contact, 1 NO contact
Switching voltage	AC/DC 30 V
Switching current max.	250 mA
Connection	Soldered connection

Ordering table

Designation	Version	Order No.
Key-operated switch	Key removable in both positions	**083639**

For technical data see page 71

▶ **Connection cable coiled and straight**

View of cable cross-section

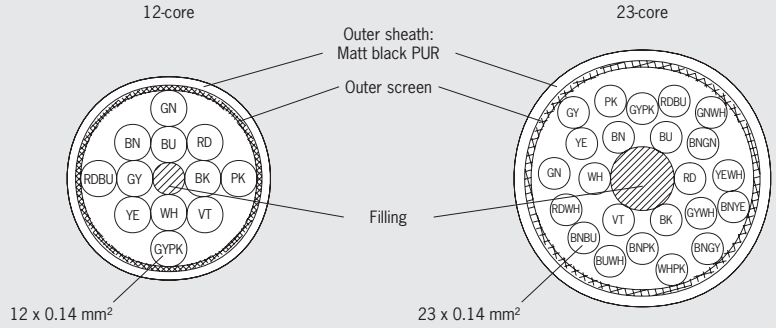

Dimensions of coiled design

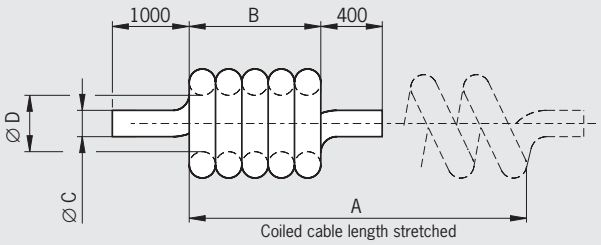

Parameter		Value
Cable resistance		≤ 145 Ω/km
Test voltage core/core		1.0 kV_{rms}
Test voltage core / screen		1.0 kV_{rms}
Insulation resistance		≥ 200
Operating temperature		-10 ... +70 °C
Bending radius	once	≥ 10 x cable diameter
	several times	≥ 15 x cable diameter

Ordering table

Item	Cable length [mm]	A [mm]	B [mm]	∅ C [mm]	∅ D [mm]	Order No.
12-core, coiled cable	3,900	approx. 2,500	550 ± 20	6 ± 3	8 ± 2	**086721**
12-core, coiled cable	5,400	approx. 4,000	880 ± 20	6 ± 3	8 ± 2	**086722**
12-core, straight cable	3,500	–	–	–	–	**087379**
12-core, straight cable	5,000	–	–	–	–	**087380**
12-core, straight cable	10,000	–	–	–	–	**087381**
23-core, coiled cable	3,900	approx. 2,500	550 ± 20	7.5 ± 0.3	10 ± 2	**087408**
23-core, coiled cable	5,400	approx. 4,000	880 ± 20	7.5 ± 0.3	10 ± 2	**087409**
23-core, straight cable	3,500	–	–	–	–	**087382**
23-core, straight cable	5,000	–	–	–	–	**087383**
23-core, straight cable	10,000	–	–	–	–	**087384**

Subject to technical modifications; no responsibility is accepted for the accuracy of this information.

Enabling switch kit ZSA and ZSA with built-in plug connector

- **Housing G1**
- **3-stage function**
- **Single or dual-channel version**
- **Kit without connection cable**

3-stage function
Enabling function is only active in the second stage (middle position, actuating point). If the button is released or pushed further (panic function), the enabling is removed (dependent on the wiring, see function sequence).

Switching elements (see also page 8)
- **111** 1 NO + 1 NC ⊖ + 1 NC
- **121** 1 NO + 2 NC ⊖ + 1 NC
- **210** 2 NO + 1 NC ⊖
- **220** 2 NO + 2 NC ⊖
- **2220** 2 NO/NC ⊖ 2)

ZSA, 3-stage function
Tab connector

Dimension drawings

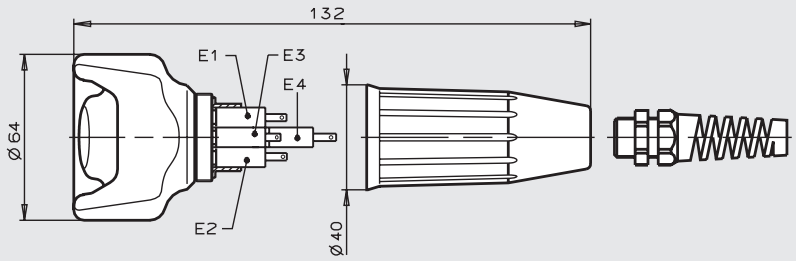

Wiring diagrams/function sequence

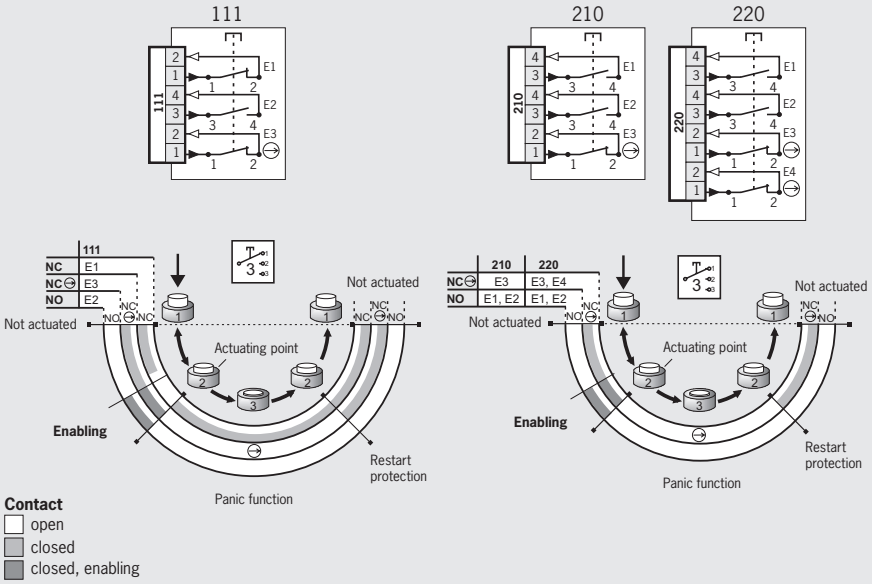

Ordering table

Design	Connection	Version	Switching element		
			111: 1 NO+1 NC ⊖ +1 NC	**210**: 2 NO+1 NC ⊖	**220**: 2 NO + 2 NC ⊖
Kit 3-stage **G1**	**Tab connector**	without cable	**070734** ZSA2-1	**070735** ZSA2-2	**070792** ZSA2-4

For technical data see page 71

ZSA, 3-stage function
With built-in plug connector

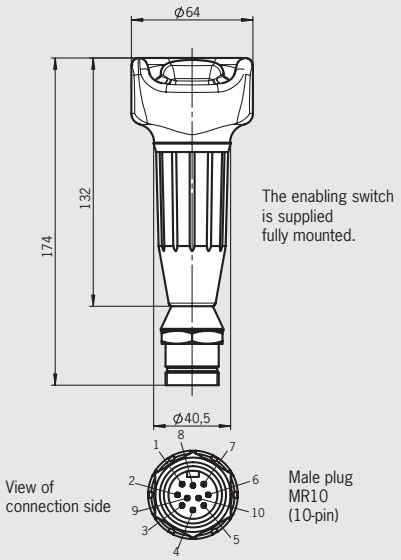

For mating connectors see page 70

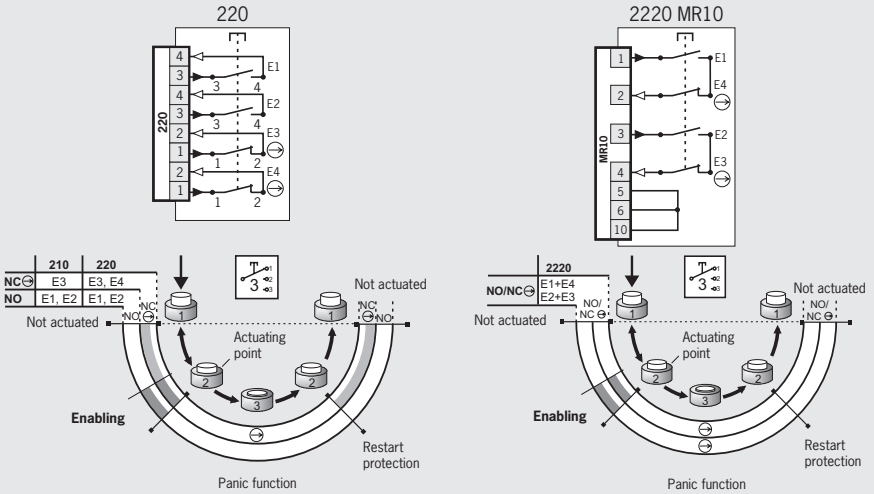

Contact
- open
- closed
- closed, enabling

Ordering table

Design	Connection	Version	Switching element	
			220: 2 NO + 2 NC ⊖	**2220**: 2 NO/NC ⊖ [1]
3-stage **G1** With built-in plug	**MR10** Plug connectors (10-pin)	without cable	On request	**095497** ZSA2-4-10C1903

1) Only closed in middle position, a normally open contact and a positively driven contact are combined internally.

Subject to technical modifications; no responsibility is accepted for the accuracy of this information.

Enabling device kit ZSA

- **Housing G1**
- **2-stage function**
- **Single or dual-channel version**
- **Kit without connection cable**

2-stage function [1)]
Enabling function is active in the second stage (pressed position). When the button is released, the enabling is removed (see function sequence).

Switching elements (see also page 8)
- **10** 1 NO
- **20** 2 NO
- **21** 2 NO + 1 NC

ZSA, 2-stage function [1)]
Tab connector

Dimension drawings

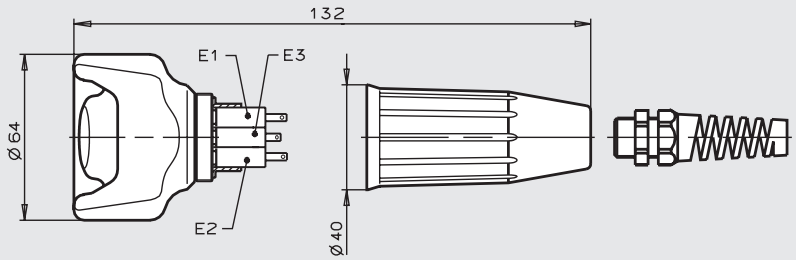

Wiring diagrams/function sequence

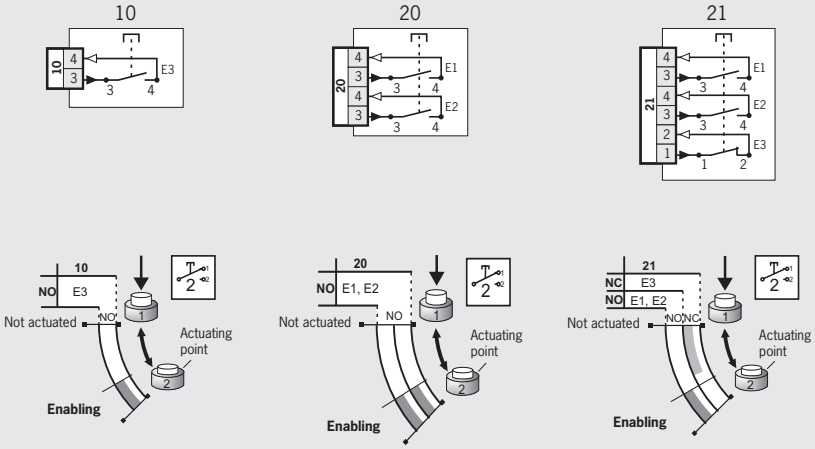

Contact
- open
- closed
- closed, enabling

Ordering table

Design	Connection	Version	Switching element		
			10: 1NO	**20**: 2NO	**21**: 2NO+1NC
Kit 2-stage [1)] **G1**	**Tab connector**	without cable	**070750** ZSA1-1	**070800** ZSA1-2	**070736** ZSA1-3

1) As per VDI 2854, a device comparable to an emergency stop device must be fitted!

2) Only closed in middle position, a normally open contact and a positively driven contact are combined internally.

For technical data see page 71

Subject to technical modifications; no responsibility is accepted for the accuracy of this information.

Selection table for accessories

Holders for hand-held enabling switches

Actuator for safety switches NZ.VZ and TZ with separate safety function

Plug connectors

BD4	3-pin + PE
SS4	3-pin + PE
C16-1	6-pin + PE
SD12	11-pin + PE
BS12	11-pin + PE
RC12	12-pin
RC17	17-pin
UT23	23-pin

Connection cables

Holder ZSM	Holder ZSA	Actuator	Plug connectors BD4	SS4	C16-1	SD12	BS12	RC12	RC17	UT23	Connection cables	Page
●												64
	●	●										65
			●	●	●	●	●					66
								●	●			67
										●		68
											●	69

Holder for hand-held enabling switch ZSM

- **Holder for hand-held enabling switch ZSM**

Screw holder for enabling switch ZSM
Depending on the version, the holder can be fastened to machine parts either with a magnet or two screws.

Screw holder for enabling switch ZSM

Dimension drawing

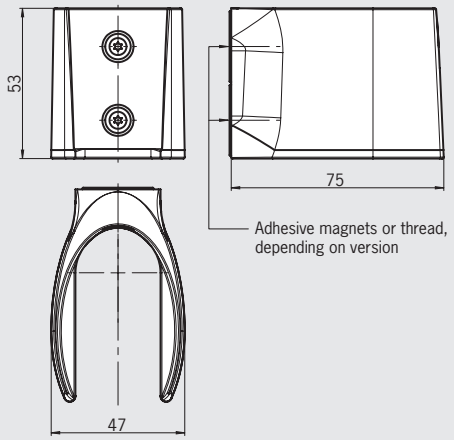

Ordering table

Designation	Version	Order No./item
Holder for enabling switch ZSM	Screw mounting	**102969** Holder ZSM
	Magnet fastening	**102965** Holder ZSM with magnet

Subject to technical modifications; no responsibility is accepted for the accuracy of this information.

Holder for hand-held enabling switches ZSA and ZSB/ Actuator for safety switches NZ.VZ and TZ with separate safety function

- **Magnetic holder**
- **Screw holder**
- **Screw holder with cable hook**
- **Actuator for mounting on the hand-held enabling switch**

Magnetic holder for housing G1
The enabling switches can be attached at any time to any part of the machine due to the magnets fastened to the holder. In this way the enabling switch can be positioned in the activity area as necessary.

Screw holder for housing G1
The holder can be securely fastened to parts of the machine with a wall thickness of max. 15 mm using two screws.

Screw holder for housing G1 with cable hook
A holder with an additional cable hook for hanging a wound-up cable.

Actuator for safety switch
Suitable for fitting, e.g. to the hand-held enabling switch kit. Safe position sampling of the enabling switch can be achieved by fitting the actuator and the use of an appropriate safety switch (NZ.VZ or TZ). By suitable integration of this combination, the signal from the safety switch can be used, e.g., as an operating mode selector switch when the actuator is removed (removal of the enabling switch). Suitable for the kit ZSA.

Magnetic holder

Dimension drawings

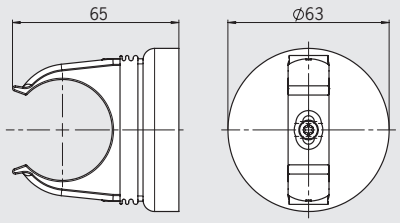

Screw holder

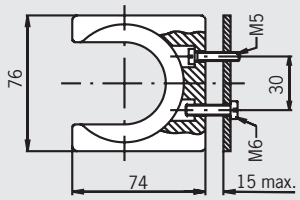

Screw holder with cable hook

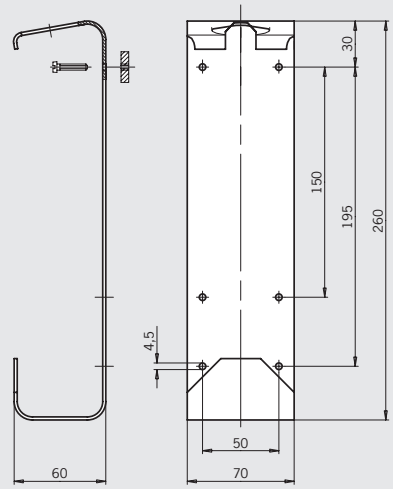

Actuator for safety switches series NZ.VZ and TZ

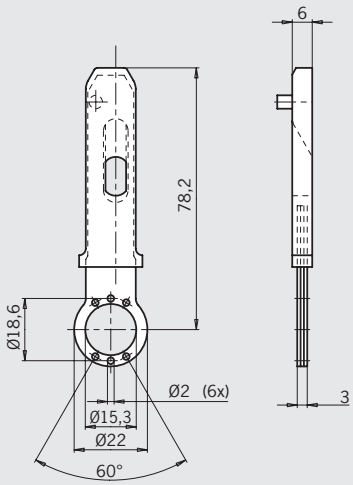

Ordering table

Designation	Version	Order No./item
Magnetic holder		**059340** Magnetic holder
Screw holder	M5 x 25	**052406** Holder complete
	with cable hook M4 x 20	**047820** Cable holder
Actuators NZ/TZ		**084833** Actuator-Z-G-C1932

For technical data see page 71

Plug connectors

- **Female flange connector BD4**
- **Male plug SS4**
- **Female connector C16-1**
- **Male flange connector SD12**
- **Female connector BS12**
- **Extension cable**

Female flange connector BD4
Female flange connector for male plug SS4 on the enabling switch.

Male plug SS4
Male plug for enabling switch for connection to safety switch TZ... C1662 (see catalog NZ/TZ).

Female connector C16-1 [1)]
Female connector for hand-held enabling switches.

Male flange connector SD12
Male socket for female connector BS12. For the connection of hand-held and HBE enabling switches.

Female connector BS12
Female connector for male flange connector SD12. For connection, e.g. to enabling switch.

Female flange connector BD4
3-pin + PE

Dimension drawings

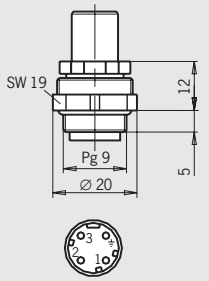

View of connection side, socket

Male plug SS4
3-pin + PE

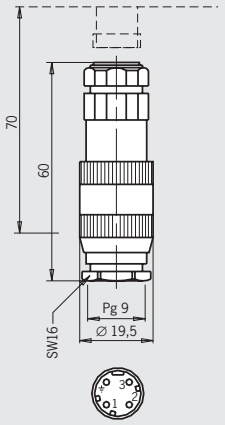

View of connection side, plug

Female connector C16-1
6-pin + PE

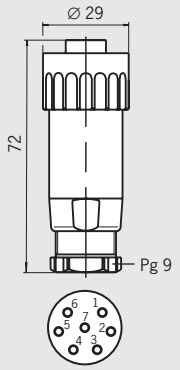

View of connection side, socket

Male flange connector SD12
11-pin + PE

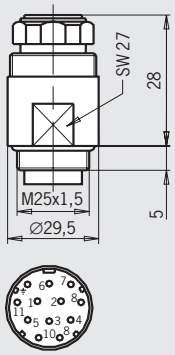

View of connection side, socket

Female connector BS12
11-pin + PE

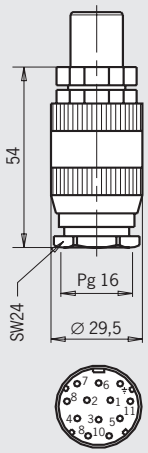

View of connection side, socket

Ordering table

Designation	Connection	Version	Order No./item
BD4 3-pin + PE	Soldered contact	Female flange connector for male plug SS4 on the enabling switch	**002786** BD4
SS4 3-pin + PE	Soldered contact	Male plug for flange connector BD4 (e.g. TZ...C1662)	**002787** SS4
C16-1 6-pin + PE	Crimp contact [1)]	Female connector	**043861** Cable socket 6+PE
SD12 11-pin + PE	Soldered contact	Male flange connector for female connector BS12 on the enabling switch	**085648** SD12-M
BS12 11-pin + PE	Soldered contact	Female connector, straight, for flange connector SD12	**002763** BS12
BS12 11-pin + PE	-	Extension cable 5 m	**071362** BS12
	-	Extension cable 10 m	**079835** BS12

For information on crimp contacts see page 69.

1) Crimp contacts are included.

Subject to technical modifications; no responsibility is accepted for the accuracy of this information.

Plug connectors

- **Female flange connector RC12**
- **Male plug RC12**
- **Blanking plug RC12**
- **Female flange connector RC17**
- **Male plug RC17**
- **Blanking plug RC17**

Female flange connector RC12 [1)]
For front panel mounting for connection of hand-held enabling switches. Fitted with soldered contacts. Rubber seal included.

Male plug RC12 [1)]
For connection, e.g. to enabling switches.

Blanking plug RC12 [1)]
For covering the flange connector RC12. As an option, bridges can be fitted to the individual contacts at the customer, or a pre-wired version (coded) used.
Coding: bridge from pin 1 to pin 2 and from pin 9 to pin 10.

Flange connector RC17 [1)]
For front panel mounting for connection of enabling switches. Rubber seal included. Fitted with soldered contacts.

Male plug RC17 [1)]
For connection, e.g. to enabling switch.

Blanking plug RC17 [1)]
For covering the flange connector RC17. Optionally, individual contacts can be bridged at the customer.

Female flange connector RC12
12-pin

Dimension drawings

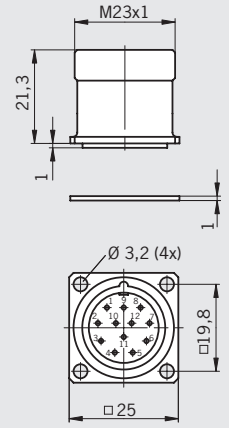

View of connection side, socket

Male plug RC12
12-pin

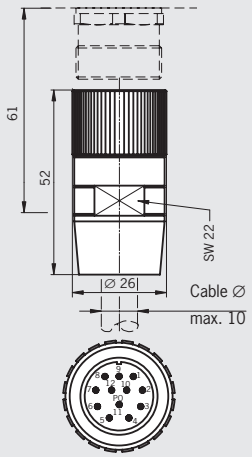

View of connection side, plug

Blanking plug RC12
12-pin

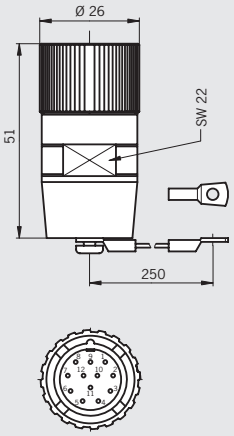

View of connection side, plug

Female flange connector RC17
17-pin

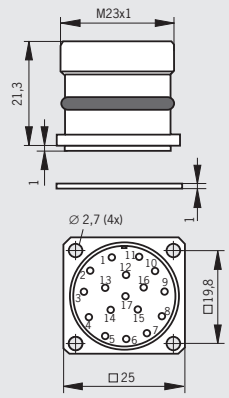

View of connection side, socket

Male plug RC17
17-pin

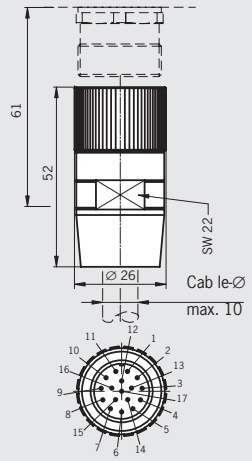

View of connection side, plug

Blanking plug RC17
17-pin

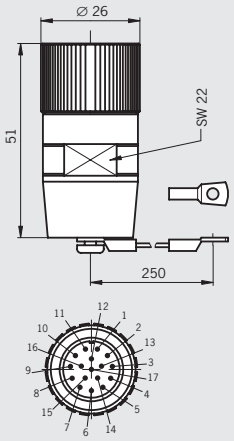

View of connection side, plug

Ordering table

Designation	Connection	Version	Order No./item
RC12 12-pin	Soldered connection	Female flange connector	**073290** Female flange connector 12-pin
	Crimp contact [1)]	Male plug	**073294** Plug connector 12-pin
	Crimp contact [1)]	Blanking plug (with bridges) e.g. in combination with ZS...C1770	**073291** Blanking plug complete 12-pin
	Crimp contact [1)]	Blanking plug (without bridges)	**073293** Blanking plug 12-pin
RC17 17-pin	Soldered connection	Female flange connector	**077502** Female flange connector 17-pin
	Crimp contact [1)]	Male plug	**096481** Plug connector 17-pin
	Crimp contact [1)]	Blanking plug (without bridges)	**096159** Blanking plug 17-pin

For technical data see page 71

For information on crimp contacts see page 69.

1) Crimp contacts are included.

Plug connectors

- **Female flange connector UT23**
- **Blanking plug UT23 with chain**

Female flange connector UT23 [1)]
Female flange connector for male plug UT23 on enabling switch ...C1715.

Blanking plug UT23 with chain [1)]
Blanking plug for female flange connector UT23.

Female flange connector UT23
23-pin

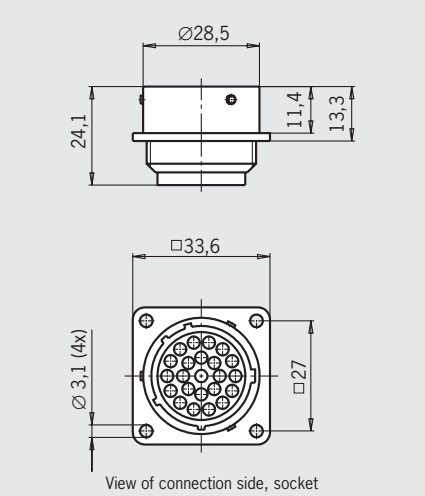

Blanking plug UT23
with chain

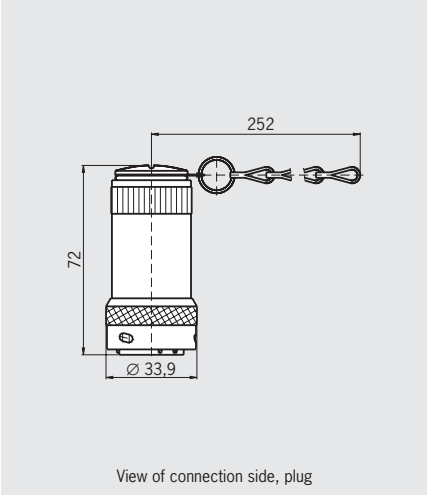

Ordering table

Designation	Connection	Version	Order No./item
UT23 23-pin	Crimp contact [1)]	Female flange connector for enabling switch ..C1725	**074384** Flange connector / 23-pin / metal version
		Blanking plug with chain (3 bridges included)	**083457** Short-circuit plug with chain

For information on crimp contacts see page 69.

1) Crimp contacts are included.

Subject to technical modifications; no responsibility is accepted for the accuracy of this information.

Connection cables

Connection cable for enabling switch ZSM with plug connector RC17

Connection cable for enabling switch ZSM with plug connector RC17
The high-quality connection cable for the ZSM2300-106374 is available in two lengths and can be plugged directly on the device.
The corresponding flange connector is available for connection to the ZSM kit (see page 36).

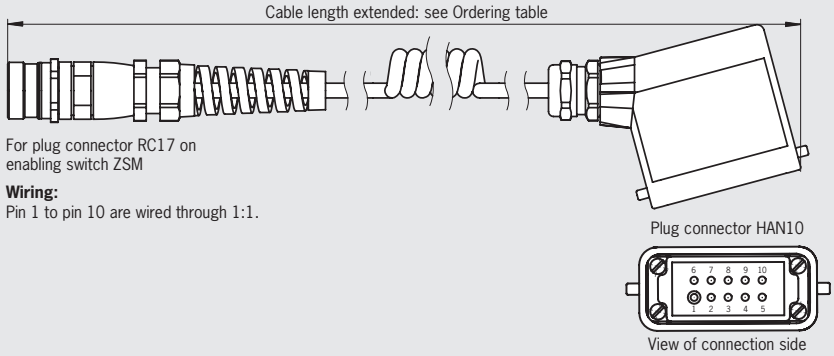

Ordering table

Designation	Version	Order No./item
Connection cable for enabling switch ZSM with plug connector RC17	Coiled, length 3.9 m	**106391** Coiled cable with plug connector 3.9 m
	Coiled, length 9.0 m	**106392** Coiled cable with plug connector 9 m

Connection cable for enabling switch ZXE-111276
4-pin, tab connector

Connector assignment

Pin	Cross-section [mm²]	Core color
1	0.34	RD
2	0.34	BK
3	0.34	OR
4	0.34	BN

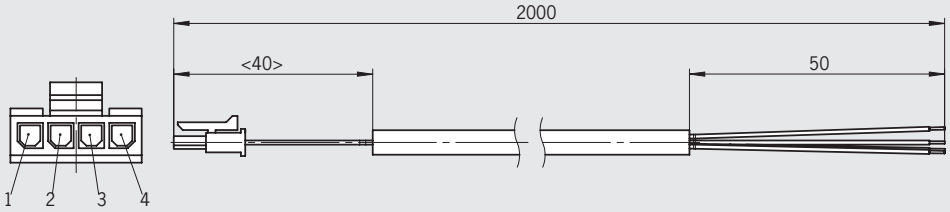

Ordering table

Designation	Connection	Order No./item
Connection cable for enabling switch ZXE-111276	Tab connector	**115123** Connection cable for enabling switch ZXE-111276

For technical data see page 71

List of plug connector suppliers

We provide no guarantee for the completeness and correctness of the ordering data given. The data was valid on October 2004. The related manufacturers reserve the right to make changes without notice. The plug connectors and accessories listed are also available from other manufacturers.

▸ Plug connectors and accessories

For plug connector	Function	Manufacturer's designation	
SVM5 5 pins	Female connector M12	**99-0436-57-05** Cable socket	**Binder** www.binder-connector.de
	Female flange connector M12	**09-3442-700-05** Flange connector with flexible wires	
	Blanking plug M12	**08-2425-000-000** Protective cap for socket with retaining strap	
C16-1 6 pins + PE	Female flange connector	**T3107 500** Female receptacle	**Amphenol-Tuchel** www.amphenol-tuchel.com
	Socket crimp contacts for C16-1, packaging unit 100 pcs.	**VN02 016 0002 (1)** Single contact, silver, 0.5-1.5 mm2	
	Blanking plug	**T6483 000** Protective cap for female receptacle	
MR 7, 8, 9, 10 and 12 pins	Straight female connector (7-pin), pre-assembled for built-in connector MR7	**MIN-7FPX-..** Female plugs with cable	**MENCOM** **www.mencomcorp.com**
	Straight female connector (8-pin), pre-assembled for built-in connector MR8	**MIN-8FPX-..** Female plugs with cable	
	Straight female connector (9-pin), pre-assembled for built-in connector MR9	**MIN-9FP-..** Female plugs with cable	
	Straight female connector (10-pin), pre-assembled for built-in connector MR10	**MIN-10FP-..** Female plugs with cable	
	Straight female connector (12-pin), pre-assembled for built-in connector MR12	**MIN-12FP-..** Female plugs with cable	
HAN10 10 pins + PE	Flange connector 1 cable exit	**19 20 010 0251** Socket housing 1 cable exit	**Harting** www.harting.com
	Socket contacts (installation for flange connector)	**09 20 010 3101** Socket contact insert crimp connection	
	Socket contacts for crimping	**09 33 000 6220** Crimp contacts, socket, 0.5 mm2	
	Blanking plug	**09 20 010 5425** Cover	
RC17-Y coded 17 pins	Female flange connector, solder For male connector RC17	**RC-17S1Y122000** Flange plug connector 17-pin	**Coninvers** www.coninvers.com

▸ Crimp and extraction tools

For plug connector	Function	Manufacturer's designation	
SR6 and SR11	Crimp tool	**932 507-002** XZC 0701	**Hirschmann** www.hirsch-mann.com
	Extraction tool	**931 812-001** XWA 164	
C16-1	Crimp tool	**TA0500 + TA0000163 + TA0002016001** Crimp pliers, jaws and contact receptacle	**Amphenol-Tuchel** www.amphenol-tuchel.com
	Extraction tool	**FG 0300 1461** Extraction tool	
RC12 and RC17	Crimp tool	**RC-Z2504** Crimp pliers for machined contacts	**Coninvers** www.coninvers.com
	Extraction tool	**RC-Z2494** Extraction tool/insertion tool	
UT23	Crimp tool	**Y16RCM** Crimping tool for machined contacts	**Burndy** www.burndy.com
	Extraction tool	**RX2025GE1** Extraction tool	

Subject to technical modifications; no responsibility is accepted for the accuracy of this information.

Overview

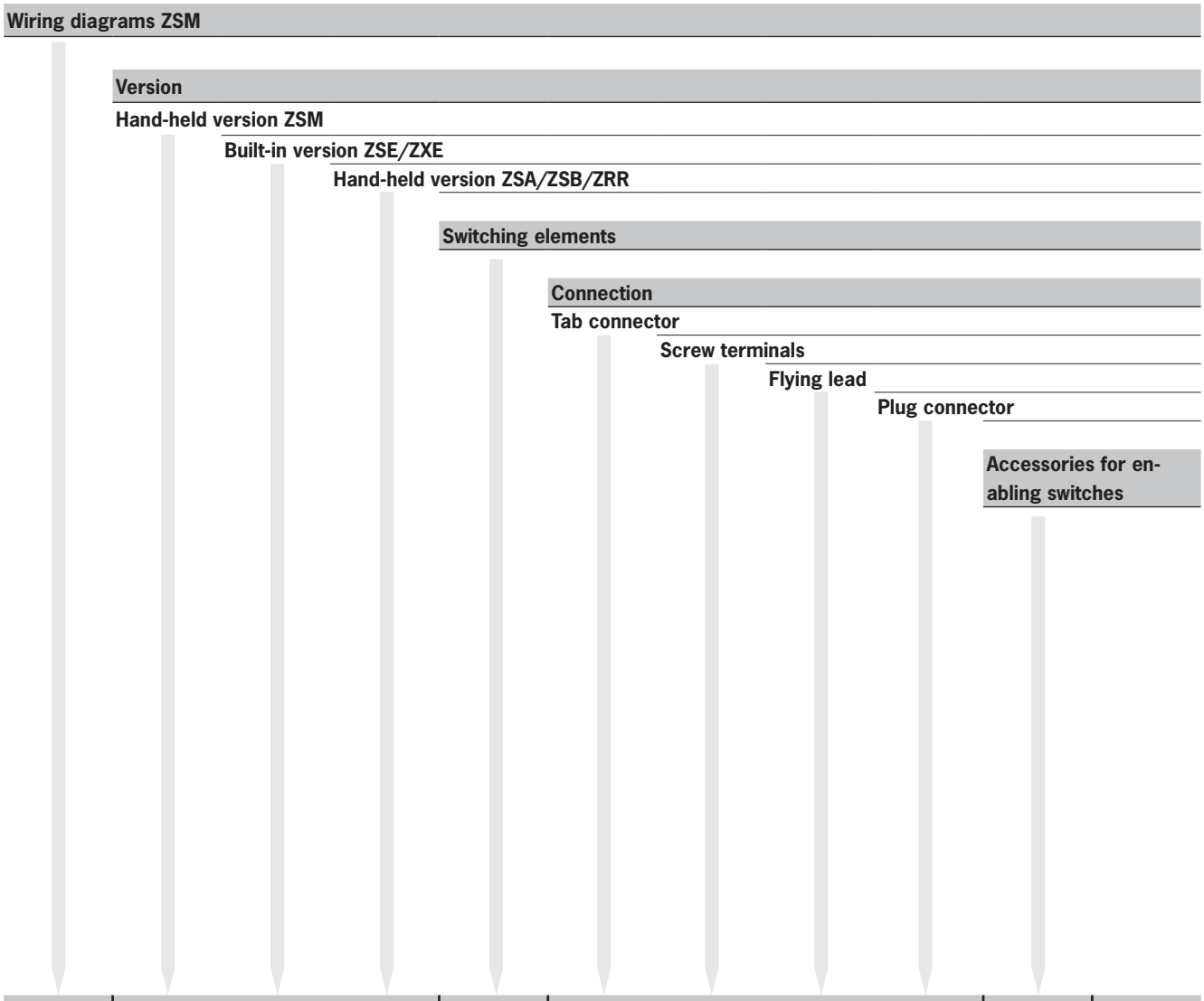

Wiring diagrams ZSM	Version			Switching elements	Connection				Accessories	Page
	ZSM Hand-held	ZSE/ZXE Built-in	ZSA/ZSB/ZSR Hand-held		Tab connector	Screw terminals	Flying lead	Plug connector		
●										72 - 78
	●									79/80
		●								81
			●							81
				●						81
					●					82
						●				82
							●			82
								●		82/84
									●	85/86

Wiring diagrams

ZSM4201-102059

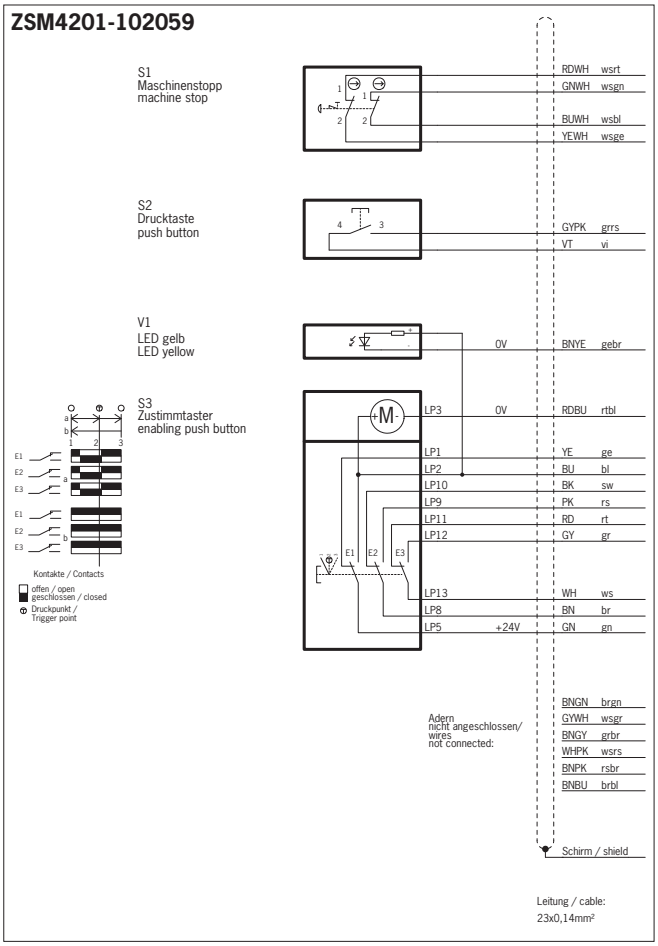

ZSM4204-102966

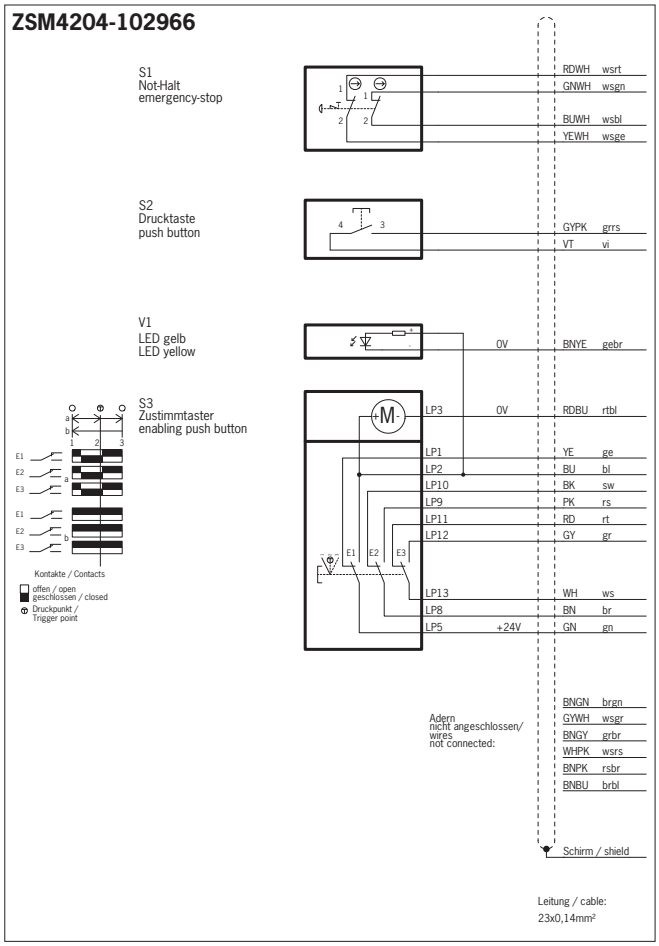

ZSM4204-105645

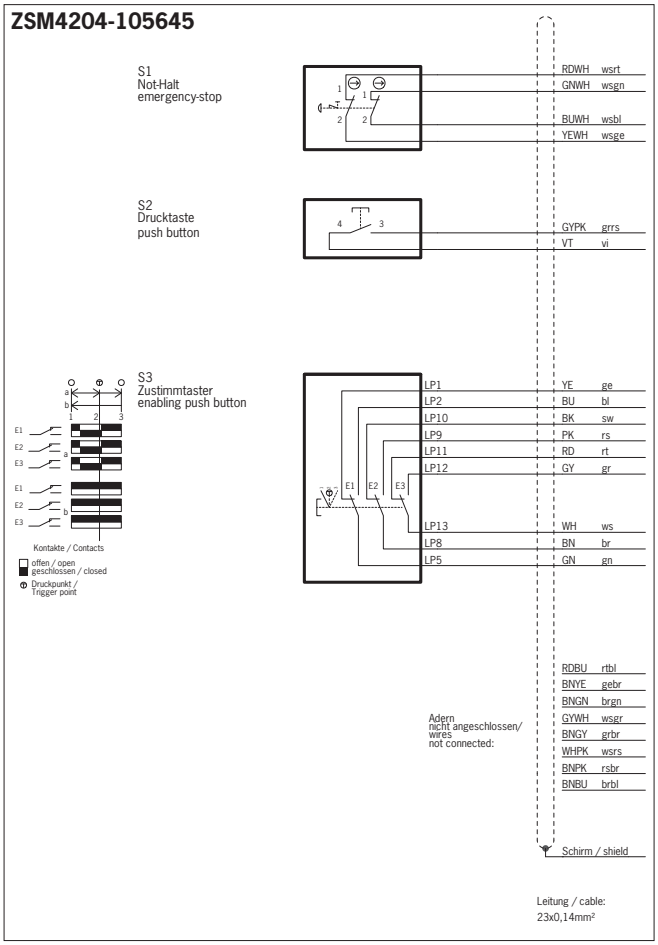

Subject to technical modifications; no responsibility is accepted for the accuracy of this information.

ZSM2101-099715

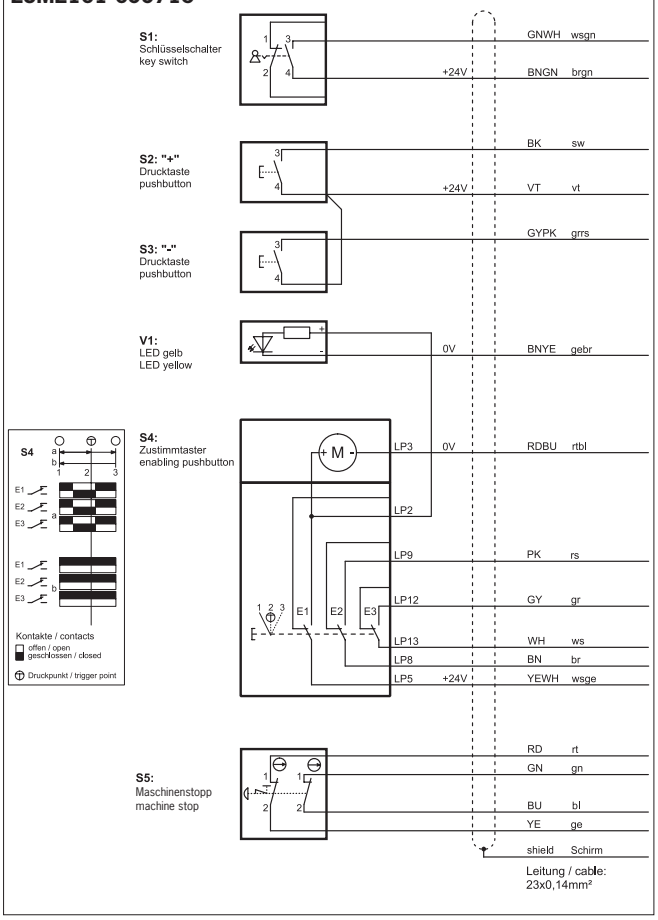

ZSM2101-103126

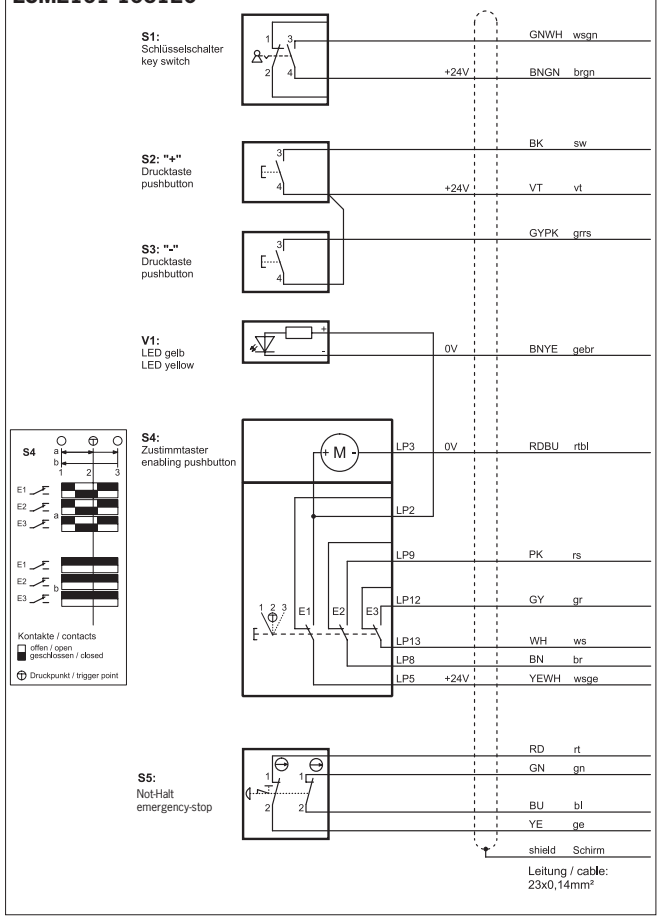

ZSM2301-110317

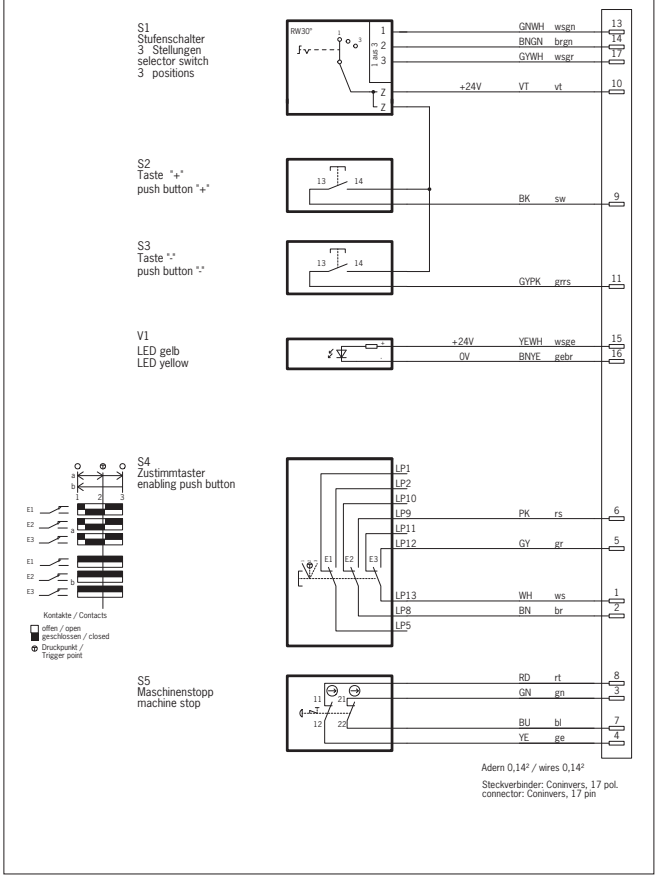

ZSM2301-105075

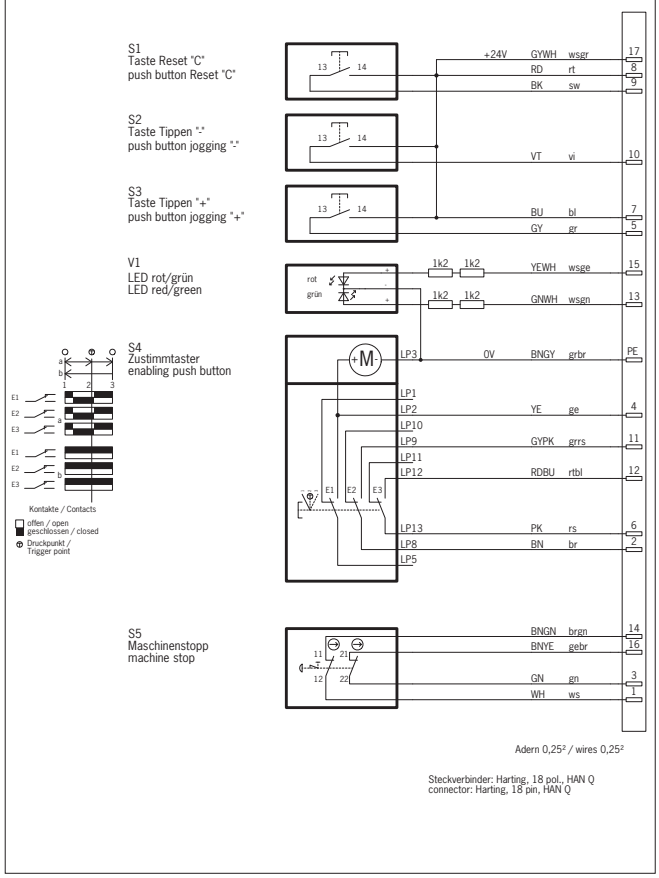

Wiring diagrams

ZSM4200-099713

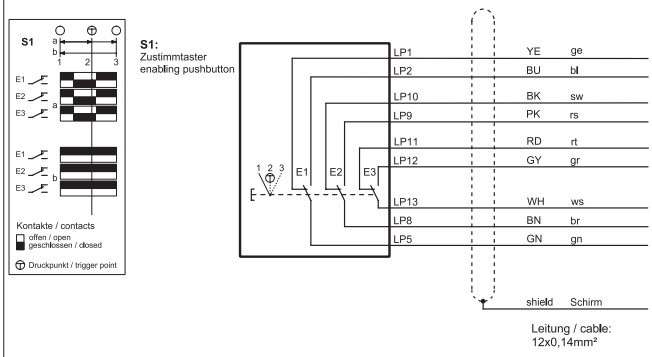

ZSM2300-111871

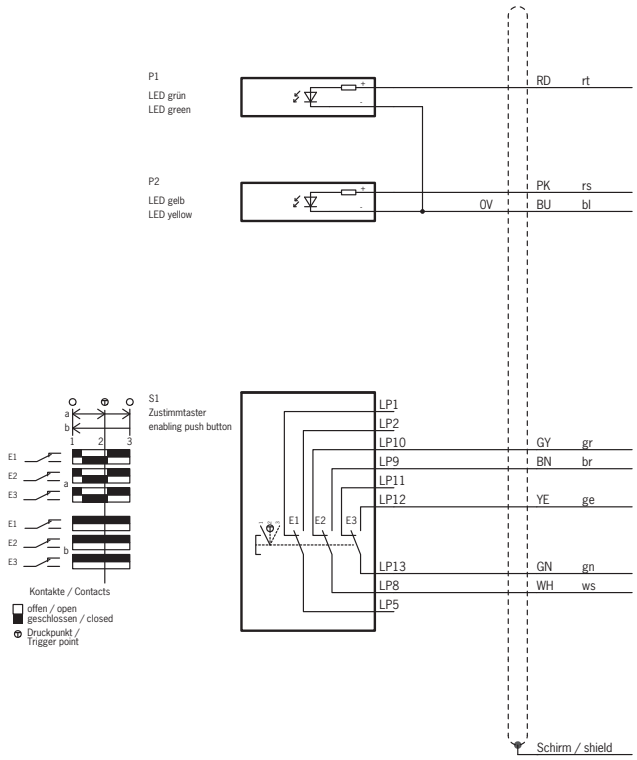

ZSM2100-099714

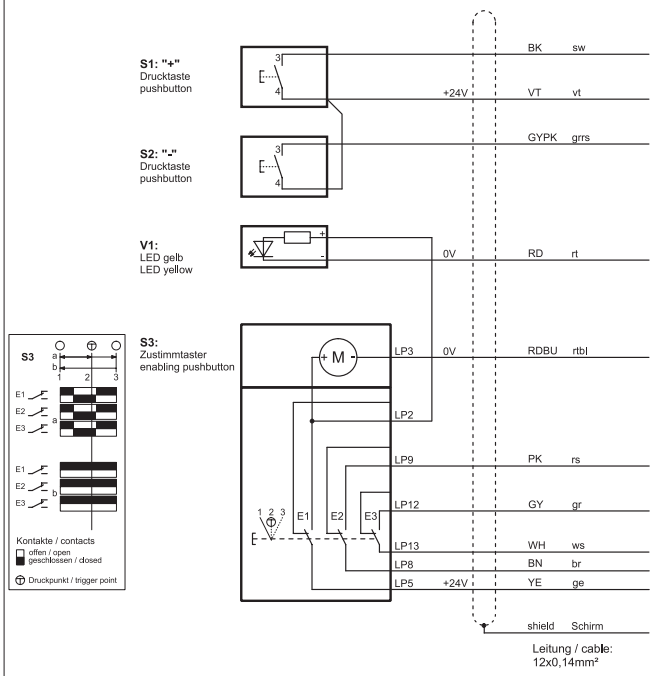

ZSM2300-109971
ZSM2300-112803

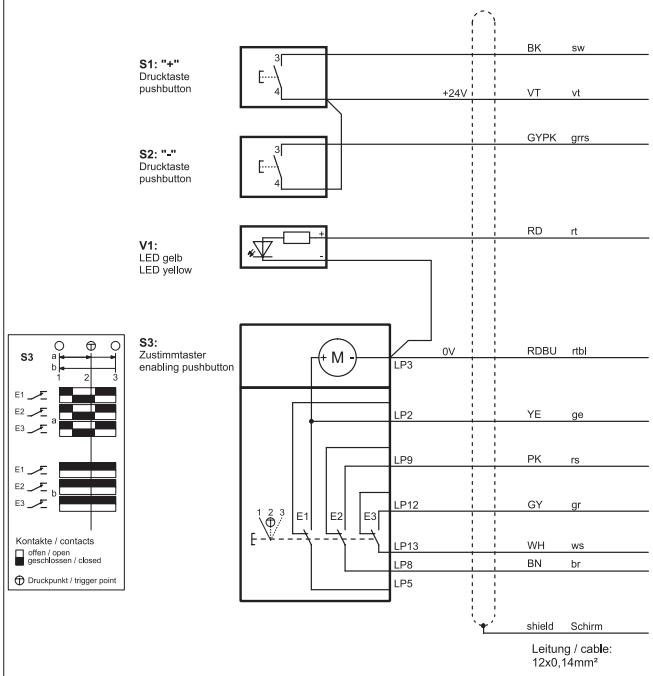

Subject to technical modifications; no responsibility is accepted for the accuracy of this information.

ZSM2300-111462

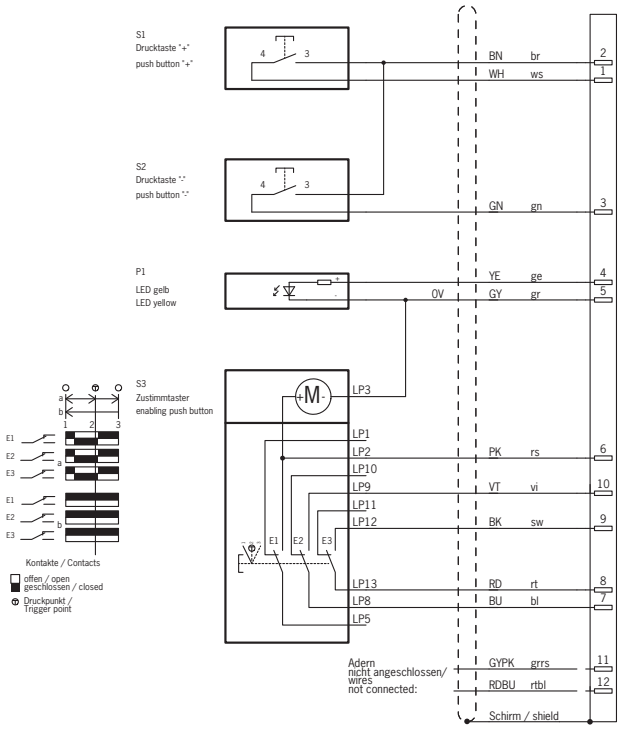

ZSM2100-111594

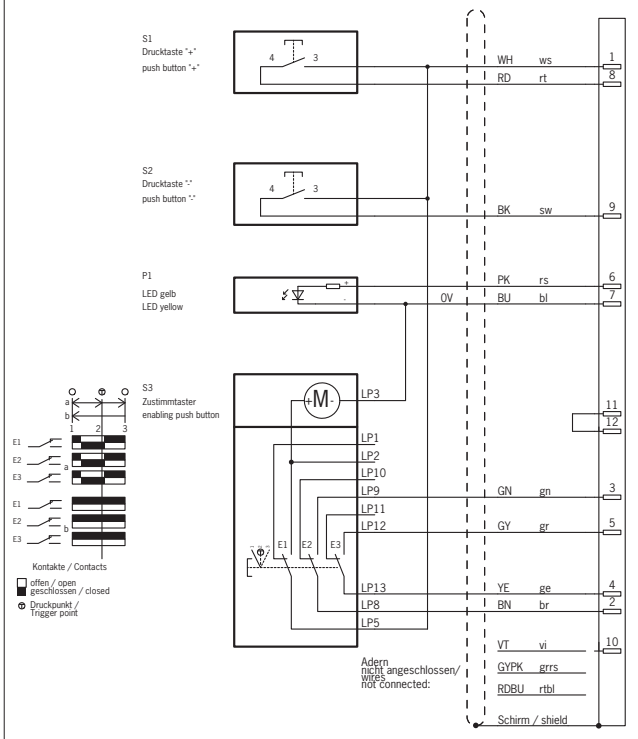

ZSM2300-099716
ZSM2300-113290

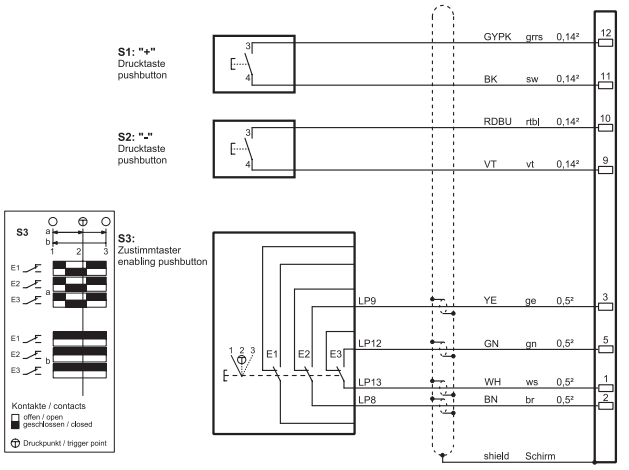

ZSM2200-100697

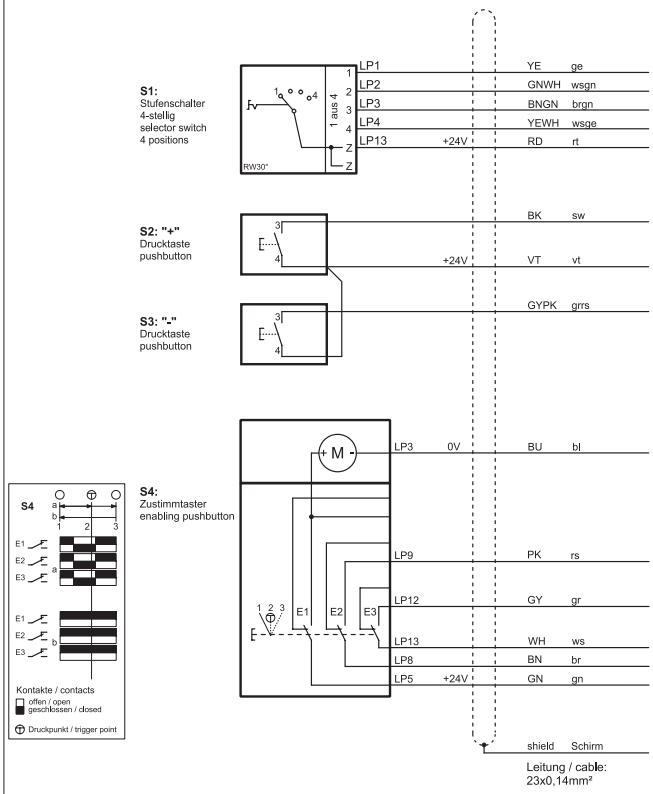

ZSM2100-106103

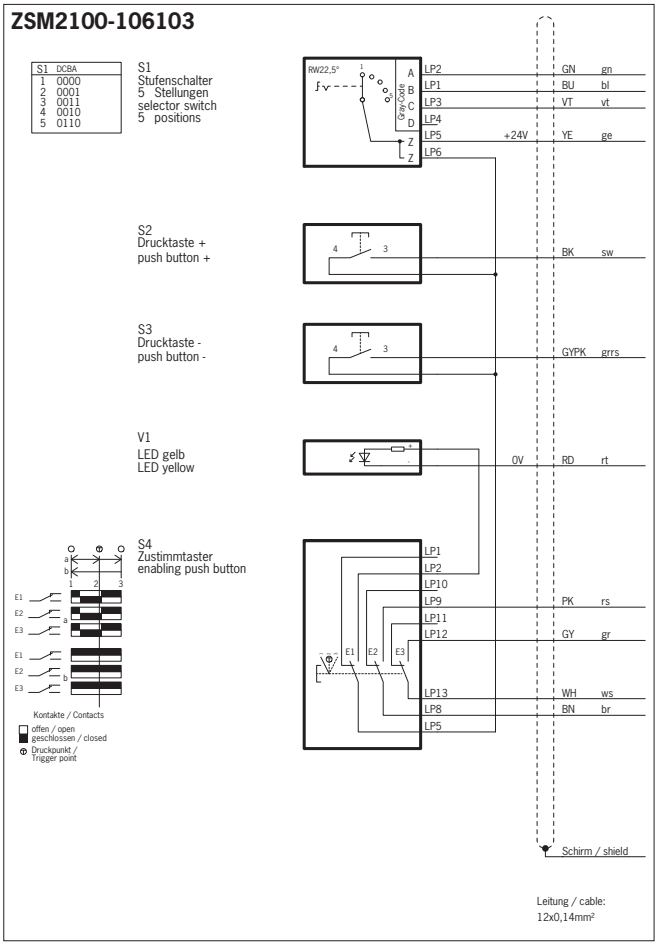

ZSM2200-105308

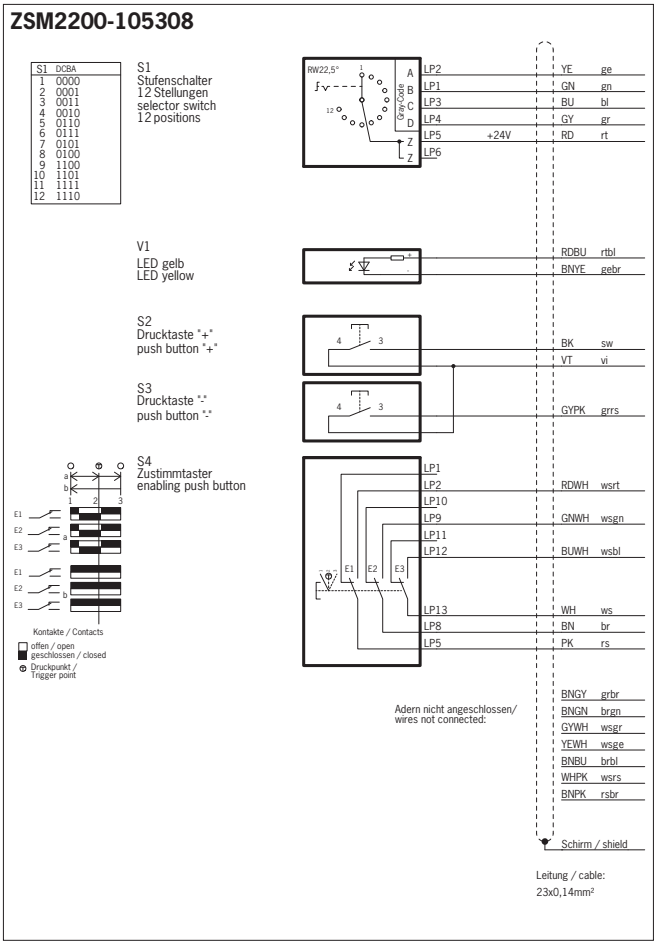

ZSM3100-103462

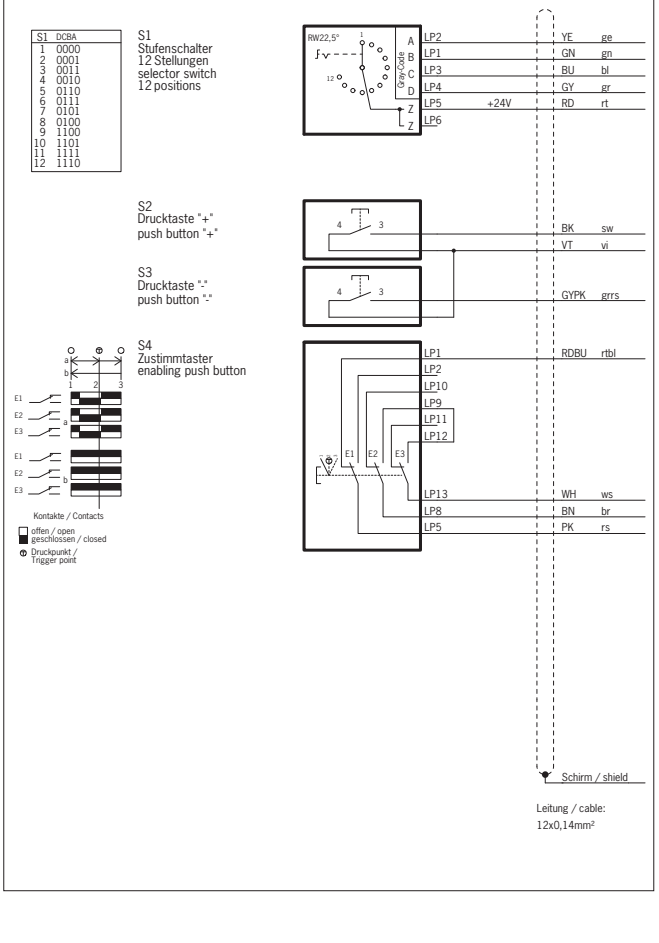

ZSM2200-112033

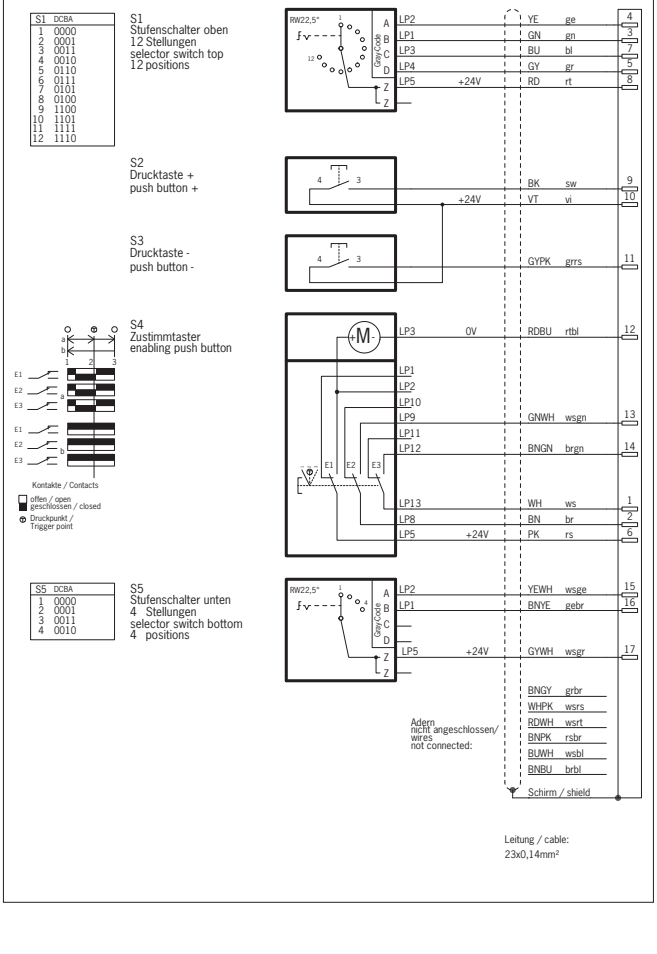

Subject to technical modifications; no responsibility is accepted for the accuracy of this information.

Wiring diagrams

ZSM2200-105362

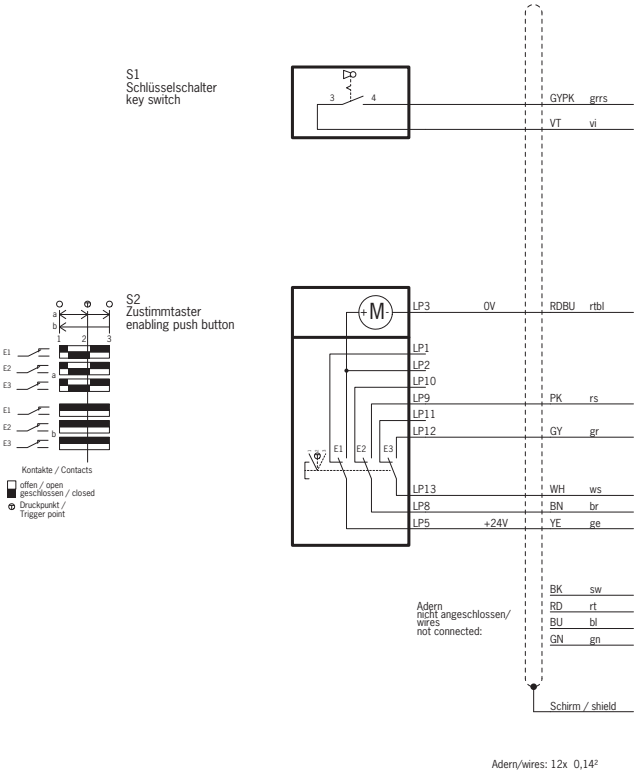

Adern/wires: 12x 0,14²

ZSM2200-111914

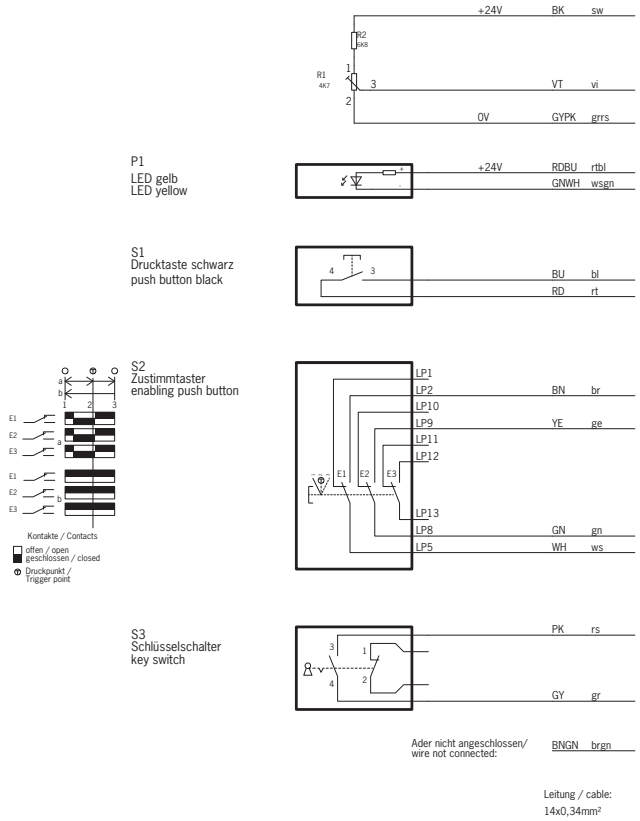

Leitung / cable:
14x0,34mm²

ZSM2300-110338

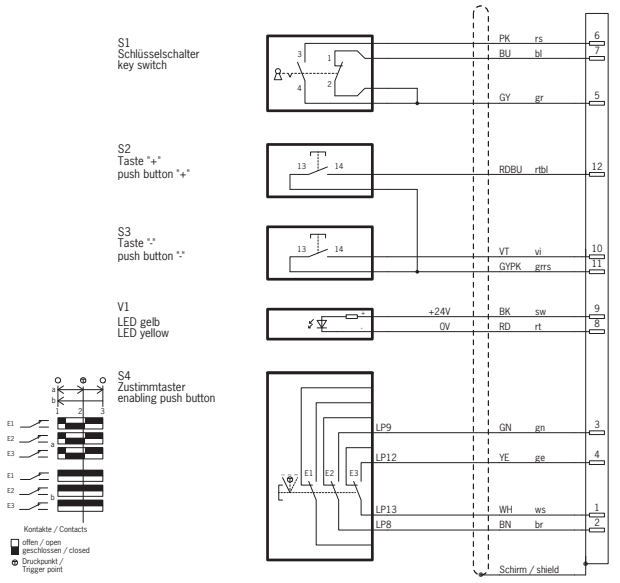

Adern 0,14² / wires 0,14²

Steckverbinder: Coninvers, 12 pol.
connector: Coninvers, 12 pin

ZSM2300-106670

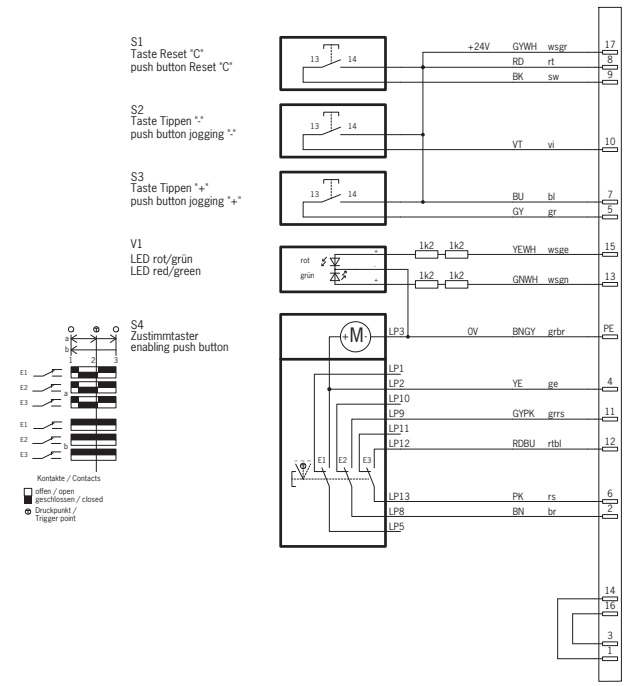

Adern 0,25² / wires 0,25²

Steckverbinder: Harting, 18 pol., HAN Q
connector: Harting, 18 pin, HAN Q

ZSM2300-106374

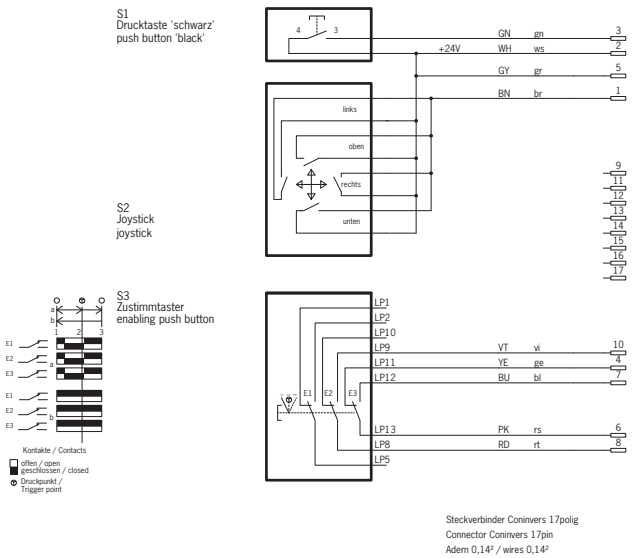

Steckverbinder Coninvers 17polig
Connector Coninvers 17pin
Adern 0,14² / wires 0,14²

Subject to technical modifications; no responsibility is accepted for the accuracy of this information.

Technical data

Basic enabling switch ZSM

Parameter		Value	Unit
Material	Housing	PA	
	Enabling switch	CR	
	Grip/seal	TPE	
Degree of protection according to IEC 529		IP 54	
Ambient temperature		-5 ... +60	°C
Weight (incl. connection cable)		approx. 1.1	kg

Switching element, enabling switch

Parameter	Value	Unit
Switching contacts	3 changeover contacts	
Life	1 x 10^6 operating cycles	
Utilization category to IEC 947-5-1 (for enabling switch)	DC13 U_e 24 V I_e 0.3 A U_e 24 V I_e 1 A	

Machine stop

Parameter	Value	Unit
Color of actuating head	Black	
Color of bottom shell	yellow	
Reset	Pull-to-reset button	
Degree of protection	IP 65	
Max. number of switching elements	2	
Contact element	2 x positively driven contact	
Utilization category according to IEC 947-5-1	DC-13 I_e 1 A U_e 24 V	

Emergency stop device

Parameter	Value	Unit
Color of actuating head	red	
Color of bottom shell	yellow	
Reset	Pull-to-reset button and turn-to-reset button	
Degree of protection	IP 65	
Number of switching elements	2	
Contact element	1 x positively driven contact	
Utilization category according to IEC 947-5-1	DC-13 I_e 1 A U_e 24 V	

Single-color LED indicator

Parameter	Value	Unit
Housing	Chrome-plated	
Operating voltage	24	V
Color	yellow or red	

Two-color LED indicator

Parameter	Value	Unit
Forward current typ.	0.02	A
Voltage red	1.85	V
Voltage green	2.2	V

Reset button/pushbutton

Parameter	Value	Unit
Switching voltage max.	30	V DC
Switching current max.	0.1	A

Selector switch

Parameter	Value	Unit
Output code	see wiring diagrams	
Switching voltage max.	25	V AC/DC
Breaking capacity max.	0.2	VA

Key-operated rotary switch

Parameter	Value	Unit
Switching voltage max.	30	V AC/DC
Switching current max.	0.25	A

Rotary potentiometer

Parameter	Value	Unit
Resistance value	4.7	kΩ
Ambient temperature	- 55 to + +125	°C
Actuating torque	0.5 to 3.5	Ncm

One-touch function

Parameter	Value	Unit
Max. switching current at 28 V DC - with resistive load - with inductive load	 2 1	A

Connection using flying lead

Parameter		Value		Unit
Connection		Cable 12 x 0.14 mm"	Cable 23 x 0.14 mm"	
Short circuit protection acc. to IEC 60269-1 (control circuit fuse)		2		A gG
Utilization category according to EN 60947-5-1				
Enabling switches	DC-13	I_e 1 A U_e 24 V		
Keys and LEDs	DC-13	I_e 0.3 A U_e 24 V		

Plug connector RC12 connection

Parameter		Value	Unit
Connection		Male connector	
Version		RC12 (11-pin + PE)	
Conductor cross-section		0.14	mm²
Rated insulation voltage U_i		0.8	kV
Utilization category according to EN 60947-5-1			
Enabling switches	DC-13	I_e 1 A U_e 24 V	
Keys and LEDs	DC-13	I_e 0.3 A U_e 24 V	

Plug connector RC17 connection

Parameter		Value	Unit
Connection		Male connector	
Version		RC17 (17-pin)	
Conductor cross-section		0.14	mm²
Rated insulation voltage U_i		0.8	kV
Utilization category according to EN 60947-5-1			
Enabling switches	DC-13	I_e 1 A U_e 24 V	
Keys and LEDs	DC-13	I_e 0.3 A U_e 24 V	

Plug connector HAN Q17 connection

Parameter		Value	Unit
Connection		Male connector	
Version		HAN Q17 (17-pin)	
Conductor cross-section		0.14	mm²
Rated insulation voltage U_i		0.8	kV
Utilization category according to EN 60947-5-1			
Enabling switches	DC-13	I_e 1 A U_e 24 V	
Keys and LEDs	DC-13	I_e 0.3 A U_e 24 V	

Subject to technical modifications; no responsibility is accepted for the accuracy of this information.

Built-in version

Parameter		Value		Unit
Housing material		Polyamide, black		
Protective cap material		CR (neoprene), black		
Degree of protection according to IEC 60529	On the front panel	IP 65		
Ambient temperature		- 5 to + +60		°C
Installation position		Any		
Weight		ZSE/ZSG: approx. 0.1	ZXE: approx. 0.03	kg
Reliability values according to EN ISO 13849-1				
B_{10d}	ZSE	5 x 10^5 operating cycles		
	ZXE	1 x 10^5 operating cycles		

Hand-held version G1

Parameter		Value	Unit
Housing material		Polyamide, black	
Protective cap material		CR (neoprene), black	
Degree of protection according to IEC 60529		IP 67 / IP 65 with additional function (button, LED)	
Ambient temperature		- 5 to + 50	°C
Weight		Approx. 0.4 (no cable)	kg
Reliability values according to EN ISO 13849-1			
B_{10d}	ZSA	5 x 10^5 operating cycles	
	ZSB	5 x 10^5 operating cycles	

Hand-held version G2

Parameter		Value	Unit
Housing material		Polyamide, yellow	
Protective cap material		CR (neoprene), black	
Degree of protection according to IEC 60529		IP 65	
Ambient temperature		- 5 to + 50	°C
Weight		Approx. 1.1 (with 5 m straight cable)	kg
Reliability values according to EN ISO 13849-1			
B_{10d}	ZSR	5 x 10^5 operating cycles	

Hand-held version G3

Parameter		Value	Unit
Housing material		Polyamide, yellow	
Protective cap material		CR (neoprene), black	
Degree of protection according to IEC 60529		IP 65	
Ambient temperature		- 5 to + 50	°C
Weight		Approx. 1.5 (with 5 m straight cable)	kg
Reliability values according to EN ISO 13849-1			
B_{10d}	ZSB	5 x 10^5 operating cycles	

Switching elements

Parameter	Value				Unit
Switching principle	Slow-action switching contact				
Life	1 x 10^5 cycles				
Function sequence	2-stage	3-stage			
Switching element with 1 switching contact	**10** 1 NO	**1110** 1 NO/NC ⊖			
Switching element with 2 switching elements	**20** 2 NO	**1210** 1 NO/NC ⊖ + 1 NO	**2202** 2 NO/NC	**2220** 2 NO/NC ⊖	
Switching element with 3 switching elements	**21** 2 NO + 1 NC	**111** 1 NO + 1 NC ⊖ + 1 NC	**210** 2 NO + 1 NC ⊖	**300** 3 NO	
Switching element with 4 switching elements	-	**121** 1 NO + 2 NC ⊖ + 1 NC	**220** 2 NO + 2 NC ⊖		
Min. switching current at 24 V	1 mA (ZXE switching element 2202: 5 mA)				

Tab connector connection, hand-held kit ZSA

Parameter		Value	Unit
Connection		Tab connector	
Version according to IEC 60760		2.8 x 0.8 mm	
Degree of protection according to IEC 60529	Connections	IP 00	
Rated impulse withstand voltage U_{imp}		2.5	kV
Rated insulation voltage U_i		250	V AC/DC
Conventional thermal current I_{th}		3	A
Short circuit protection acc. to IEC 60269-1 (control circuit fuse)		4	A gG
Utilization category according to EN 60947-5-1	AC-15	I_e 4 A U_e 230 V	
	DC-13	I_e 3 A U_e 24 V	

Screw terminal connection, ZXE

Parameter		Value	Unit
Connection		Screw terminals	
Version		4-pin	
Tightening torque, max.,		0.15	Nm
Conductor diameter	single cond.	0.3 - 1.4 mm, AWG 22 - 16	
Conductor nominal diameter	single cond.	1.5	mm²
	flexible cond.	1 mm², AWG 16	
Conductor insulation stripping		5	mm
Degree of protection according to IEC 60529	Connections	IP 00	
Rated impulse withstand voltage U_{imp}		1.5	kV
Rated insulation voltage U_i		30	V AC/DC
Conventional thermal current I_{th}		0.1	A
External fuse U (+LA) / U (+LB)		0.1	A gG
Utilization category according to EN 60947-5-1	DC-13	I_e 0.1 A U_e 24 V	

Connection using flying lead

Parameter		Value				Unit
Connection		Cable 3 x 0.75 mm²	Cable 6 x 0.34 mm²	Cable 8 x 0.34 mm²	Cable 8 x 0.5 mm² + 8 x 0.14 mm²	
Version	Individual screening	2 x 0.75	3 x 0.34	4 x 0.34	4 x 0.5	mm²
	Without screen	1 x 0.75	3 x 0.34	4 x 0.34	4 x 0.5	mm²
	Additional elements	-	-	-	8 x 0.14	mm²
Rated impulse withstand voltage U_{imp}		2.5	2.5	2.5	2.5	kV
Rated insulation voltage U_i		250	250	250	250	V AC/DC
Short circuit protection acc. to IEC 60269-1 (control circuit fuse)		4	2	2	2	A gG
Utilization category of enabling switch according to EN 60947-5-1	AC-15	I_e 4 A U_e 230 V	I_e 2 A U_e 230 V	I_e 2 A U_e 230 V	I_e 2 A U_e 230 V	
	DC-13	I_e 3 A U_e 24 V	I_e 2 A U_e 24 V	I_e 2 A U_e 24 V	I_e 2 A U_e 24 V	
Utilization category of buttons and LEDs according to EN 60947-5-1	AC-15	-	-	I_e 400 mA U_e 32 V	I_e 400 mA U_e 32 V	
	DC-13	-	-	I_e 100 mA U_e 50 V	I_e 100 mA U_e 50 V	

Plug connector SS4 connection

Parameter		Value	Unit
Connection		Male connector	
Version		SS4 (3-pin + PE)	
Connection cable conductor cross-section		6 x 0.34	mm²
Degree of protection according to IEC 60529		IP 67 [1]	
Rated impulse withstand voltage U_{imp}		0.8	kV
Short circuit protection acc. to IEC 60269-1 (control circuit fuse)		2	A gG
Utilization category according to EN 60947-5-1	AC-15	I_e 2 A U_e 230 V	
	DC-13	I_e 2 A U_e 24 V	

Plug connector SVM5 connection

Parameter		Value	Unit
Connection		Male connector	
Version		SVM5 (5-pin)	
Connection cable conductor cross-section		6 x 0.34	mm²
Degree of protection according to IEC 60529		IP 67 [1]	
Rated impulse withstand voltage U_{imp}		0.8	kV
Short circuit protection acc. to IEC 60269-1 (control circuit fuse)		2	A gG
Utilization category according to EN 60947-5-1	AC-15	I_e 2 A U_e 24 V	
	DC-13	I_e 2 A U_e 24 V	

[1] Only screwed tight with the related plug connector from page 66ff

Subject to technical modifications; no responsibility is accepted for the accuracy of this information.

Plug connector C16 connection

Parameter		Value		Unit
Connection		Male connector		
Version		C16 (6-pin + PE)		
Connection cable conductor cross-section		3 x 0.75	8 x 0.34	mm²
Degree of protection according to IEC 60529		IP 67 [1]		
Rated impulse withstand voltage U_{imp}		0.8		kV
Short circuit protection acc. to IEC 60269-1 (control circuit fuse)		2		A gG
Utilization category according to EN 60947-5-1	AC-15	I_e 2 A U_e 24 V		
	DC-13	I_e 2 A U_e 24 V		

Plug connector MR7 connection

Parameter		Value	Unit
Connection		Male connector	
Version		MR7 (7-pin)	
Connection cable conductor cross-section		without cable	mm²
Degree of protection according to IEC 60529		IP 65 [1]	
Rated impulse withstand voltage U_{imp}		0.8	kV
Short circuit protection acc. to IEC 60269-1 (control circuit fuse)		2	A gG
Utilization category of enabling switch according to EN 60947-5-1	AC-15	I_e 2 A U_e 24 V	
	DC-13	I_e 2 A U_e 24 V	
Utilization category of buttons and LEDs according to EN 60947-5-1	AC-15	24 V 400 mA	
	DC-13	24 V 100 mA	

Plug connector MR8 connection

Parameter		Value	Unit
Connection		Male connector	
Version		MR8 (8-pin)	
Connection cable conductor cross-section		without cable	mm²
Degree of protection according to IEC 60529		IP 65 [1]	
Rated impulse withstand voltage U_{imp}		0.8	kV
Short circuit protection acc. to IEC 60269-1 (control circuit fuse)		2	A gG
Utilization category of enabling switch according to EN 60947-5-1	AC-15	I_e 2 A U_e 24 V	
	DC-13	I_e 2 A U_e 24 V	
Utilization category of buttons and LEDs according to EN 60947-5-1	AC-15	24 V 400 mA	
	DC-13	24 V 100 mA	

Plug connector MR10 connection

Parameter		Value	Unit
Connection		Male connector	
Version		MR10 (10-pin)	
Connection cable conductor cross-section		without cable	mm²
Degree of protection according to IEC 60529		IP 65 [1]	
Rated impulse withstand voltage U_{imp}		0.8	kV
Short circuit protection acc. to IEC 60269-1 (control circuit fuse)		2	A gG
Utilization category of enabling switch according to EN 60947-5-1	AC-15	I_e 2 A U_e 24 V	
	DC-13	I_e 2 A U_e 24 V	

Plug connector HAN10 connection

Parameter		Value	Unit
Connection		Male connector	
Version		HAN10 (10-pin + PE)	
Connection cable conductor cross-section		8 x 0.34	mm²
Degree of protection according to IEC 60529		IP 65 [1]	
Rated impulse withstand voltage U_{imp}		0.8	kV
Short circuit protection acc. to IEC 60269-1 (control circuit fuse)		2	A gG
Utilization category according to EN 60947-5-1	AC-15	I_e 2 A U_e 230 V	
	DC-13	I_e 2 A U_e 24 V	

[1] Only screwed tight with the related plug connector from page 66ff

Plug connector RC12 connection

Parameter		Value		Unit
Connection		Male connector		
Version		RC12 (11-pin + PE)		
Connection cable conductor cross-section		8 x 0.5 + 8 x 0.14	6 x 0.34	mm^2
Degree of protection according to IEC 60529		IP 67/IP 65 with additional elements [1]		
Rated impulse withstand voltage U_{imp}		0.8		kV
Short circuit protection acc. to IEC 60269-1 (control circuit fuse)		2		A gG
Utilization category of enabling switch according to EN 60947-5-1	AC-15	I_e 2 A U_e 24 V		
	DC-13	I_e 2 A U_e 24 V		
Utilization category of buttons and LEDs according to EN 60947-5-1	AC-15	24 V 400 mA	-	
	DC-13	24 V 100 mA	-	

Plug connector BS12 connection

Parameter		Value	Unit
Connection		Female connector	
Version		BS12 (12-pin)	
Connection cable conductor cross-section		8 x 0.5 + 8 x 0.14	mm^2
Degree of protection according to IEC 60529		IP 65 [1]	
Rated impulse withstand voltage U_{imp}		0.8	kV
Short circuit protection acc. to IEC 60269-1 (control circuit fuse)		2	A gG
Utilization category of enabling switch according to EN 60947-5-1	AC-15	I_e 2 A U_e 24 V	
	DC-13	I_e 2 A U_e 24 V	
Utilization category of buttons and LEDs according to EN 60947-5-1	AC-15	24 V 400 mA	
	DC-13	24 V 100 mA	

Plug connector RC17 connection

Parameter		Value		Unit
Connection		Male connector		
Version		RC17 (17-pin)		
Connection cable conductor cross-section		8 x 0.34	8 x 0.5 + 8 x 0.14	mm^2
Degree of protection according to IEC 60529		IP 67 or IP 65 with additional elements [1]		
Rated impulse withstand voltage U_{imp}		0.8		kV
Short circuit protection acc. to IEC 60269-1 (control circuit fuse)		2		A gG
Utilization category of enabling switch according to EN 60947-5-1	AC-15	I_e 2 A U_e 24 V		
	DC-13	I_e 2 A U_e 24 V		
Utilization category of buttons and LEDs according to EN 60947-5-1	AC-15	24 V 400 mA		
	DC-13	24 V 100 mA		

Plug connector RC17 Y-coded connection

Parameter		Value	Unit
Connection		Male connector	
Version		RC17 Y-coded (17-pin)	
Connection cable conductor cross-section		8 x 0.5 + 8 x 0.14	mm^2
Degree of protection according to IEC 60529		IP 67 or IP 65 with additional elements [1]	
Rated impulse withstand voltage U_{imp}		0.8	kV
Short circuit protection acc. to IEC 60269-1 (control circuit fuse)		2	A gG
Utilization category of enabling switch according to EN 60947-5-1	AC-15	I_e 2 A U_e 24 V	
	DC-13	I_e 2 A U_e 24 V	
Utilization category of buttons and LEDs according to EN 60947-5-1	AC-15	24 V 400 mA	
	DC-13	24 V 100 mA	

Plug connector UT23 connection

Parameter		Value	Unit
Connection		Male connector	
Version		UT23 (23-pin)	
Connection cable conductor cross-section		6 x 0.34	mm^2
Degree of protection according to IEC 60529		IP 67 [1]	
Rated impulse withstand voltage U_{imp}		0.8	kV
Short circuit protection acc. to IEC 60269-1 (control circuit fuse)		2	A gG
Utilization category according to EN 60947-5-1	AC-15	I_e 2 A U_e 24 V	
	DC-13	I_e 2 A U_e 24 V	

[1] Only screwed tight with the related plug connector from page 66ff

Subject to technical modifications; no responsibility is accepted for the accuracy of this information.

Key-operated rotary switch

Parameter	Value	Unit
Housing material	PA black	
Ambient temperature	-25 to + 70	°C
Front degree of protection (installed)	IP 65	°C
Switching principle	Slow-action contact element	
Switching element	1 x NC + 1 x NO	A
Max. switching current	250	mA
Switching voltage	30	V
Contact resistance	≤ 200	mΩ
Connection	Tinned circuit board connection	mΩ

Selector switch

Parameter	Value	Unit
Front degree of protection (installed)	IP 65	
Single-hole bushing mounting	M7 x 0.75	
Detent	Max. 12, stop can be adjusted as required from 2 to 12 detent positions	°C
Output code	Binary-coded	
Max. switching current	0.5	A
Max. switching voltage	AC 115 V, DC 24 V on installation in P2 or HB.. housing	
Max. breaking capacity	10	VA
Contact resistance	≤ 6	mΩ
Connection	Soldered connection	mΩ

Illuminated pushbutton

Parameter	Value	Unit
Housing material	PA6 black	
Cover material	PC, transparent	
Ambient temperature	-25 to +70	°C
Front degree of protection (installed)	IP 65	
Switching principle	Snap-action contact element	
Switching element	NC + NO	
Max. switching current	4	A
Switching voltage	250 V, 12 ... 24 V on installation in P2 or HB.. housing	V
Contact resistance	≤ 200	mΩ
Connection	Soldered connection	
Built-in LED	Incandescent lamp, white, 21 mA 24 V	

Emergency stop button

Parameter	Value	Unit
Color of actuating head	red	
Color of bottom shell	yellow	
Ambient temperature	-25 to +60	°C
Max. number of switching elements	2	
Degree of protection	IP 65	

Emergency stop switching element

Parameter	Value	Unit
Contact element	1 x positively driven contact	
Utilization category according to IEC 947-5-1	DC-13 U_e 24 V I_e 3 A	
Connection	Soldered connection	

Plug connector series SS4 and BD4

Parameter	Value	Unit
Housing material	Brass matt chromium plated	
Number of pins	4 (3 + PE)	
Cable diameter	6 - 8	mm
Nominal voltage max.	250	V AC/DC
Degree of protection according to IEC 60529 (inserted)	IP 67	
Connection	Soldered connections 1.0 mm^2	

Plug connector C16-1

Parameter	Value	Unit
Housing material	Polyamide 6.6	
Number of pins	7 (6 + PE)	
Cable diameter max.	9.5	mm
Nominal voltage max.	230	V
Degree of protection according to IEC 60529 (inserted)	IP 67	
Connection	Crimp contacts 0.5 - 1.5 mm^2	

Plug connector series BS12

Parameter	Value	Unit
Housing material	Brass matt chromium plated	
Number of pins	12 (11 + PE)	
Cable diameter max.	12 - 14	mm
Nominal voltage max.	250	V AC/DC
Degree of protection according to IEC 60529 (inserted)	IP 67	
Connection	Soldered connections 1.0 mm^2	

Plug connector series RC12

Parameter	Value		Unit
Housing material	Metal		
Number of pins	12 (screen on the housing)		
	Male plug	Flange connector	
Cable diameter max.	10	-	mm
Connection	Crimp contacts 0.14 - 0.56 mm^2	Soldered connections 1.0 mm^2	
Nominal voltage max.	230		V AC/DC
Degree of protection according to IEC 60529 (inserted)	IP 67		

Plug connector series RC17

Parameter	Value		Unit
Housing material	Metal		
Number of pins	17 (screen on the housing)		
	Male plug	Flange connector	
Cable diameter max.	10	-	mm
Connection	Crimp contacts 0.14 - 0.56 mm^2	Soldered connections 1.0 mm^2	
Nominal voltage max.	230		V AC/DC
Degree of protection according to IEC 60529 (inserted)	IP 67		

Plug connector series UT23

Parameter	Value	Unit
Housing material	Metal	
Number of pins	23	
Nominal voltage max.	230	V AC/DC
Degree of protection according to IEC 60529 (inserted)	IP 67	
Connection	Crimp contacts 0.3 - 0.5 mm^2	

Subject to technical modifications; no responsibility is accepted for the accuracy of this information.

Index by item designation

Item	Order no.	Page
Actuator-Z-G-C1932	084833	65
BD4	002786	66
Blanking plug, 12-pin	073293	67
Blanking plug, 17-pin	096159	67
Blanking plug, complete, 12-pin	073291	67
BS12	002763	66
BS12	071362	66
BS12	079835	66
Cable 12-core coiled, 3,900 mm	086721	58
Cable 12-core coiled, 5,400 mm	086722	58
Cable 23-core coiled, 3,900 mm	087408	58
Cable 23-core coiled, 5,400 mm	087409	58
Cable holder	047820	65
Cable socket 6+PE	043861	66
Cable, 12-core, straight cable, 10,000 mm	087381	58
Cable, 12-core, straight cable, 3,500 mm	087379	58
Cable, 12-core, straight cable, 5,000 mm	087380	58
Cable, 23-core, straight cable, 10,000 mm	087384	58
Cable, 23-core, straight cable, 3,500 mm	087382	58
Cable, 23-core, straight cable, 5,000 mm	087383	58
Coiled cable with plug connector, 3.9 m	106391	69
Coiled cable with plug connector, 9 m	106392	69
Connection cable for enabling switch ZXE-111276	115123	69
Emergency stop, 16 mm	096298	55
ES-XA1E-BV3UU02R	106435	55
Female connector, 17-pin	106349	56
Flange connector, 12-pin	073290	67
Flange connector, 17-pin	077502	67
Flange connector/23-pin/metal version	074384	68
Holder ZSM	102969	64
Holder ZSM with magnet	102965	64
Holder, complete	052406	65
Key-operated rotary switch	083639	57
LED display, YE 106347	106347	56
Machine stop, 16 mm	106434	55
Magnetic holder	059340	65
Male flange connector, 17-pin	106360	56
Plug connector, 12-pin	073294	67
Plug connector, 17-pin	096481	67
Pushbutton, black	083640	57
Pushbutton, blue	086757	57
Pushbutton, green	086754	57
Pushbutton, red	086753	57
Pushbutton, white	086755	57
Pushbutton, yellow	086756	57
SD12-M	085648	66
Short-circuit plug with chain	083457	68
SS4	002787	66
ZSA0100873C2038	100873	36
ZSA072887-C1932	072887	40
ZSA072969C1983	072969	39
ZSA085114C1968	085114	40
ZSA086681C1979	086681	40
ZSA086707C1983	086707	39
ZSA092141C2038	092141	36
ZSA097567C2038	097567	36
ZSA099459C2038	099495	36
ZSA1-1	070750	61
ZSA1-2	070800	61
ZSA1-3	070736	61
ZSA1A2G01AC2246	104231	51
ZSA1A2G07A	097909	51

Item	Order no.	Page
ZSA1A2L25AC1909	082557	51
ZSA1A2S05A	094321	51
ZSA1A5G05AC1917	082524	51
ZSA1A5G10AC1917	095144	51
ZSA2-1	070734	59
ZSA2-2	070735	59
ZSA2-4	070792	59
ZSA2-4-10C1903	095497	60
ZSA2A1G05A	055402	32
ZSA2A1G10A	055403	32
ZSA2A1L15AC1689	057089	32
ZSA2A1L25AC1689	072728	32
ZSA2A1S05A	055404	32
ZSA2A2G02A	099371	32
ZSA2A2G05A	055406	32
ZSA2A2G05CC1714	070741	38
ZSA2A2G10A	055407	32
ZSA2A2G15A	057007	32
ZSA2A2G20A	075807	32
ZSA2A2G25A	078939	32
ZSA2A2L12CC1725	070731	37
ZSA2A2S05A	055408	32
ZSA2A2S05AC1643	057010	32
ZSA2A3G05A	070784	32
ZSA2A3G10A	070785	32
ZSA2A3S05A	070786	32
ZSA2A4G05A	070764	32
ZSA2A4G05C-C2032	092141	38
ZSA2A4G05C-C2041	092738	38
ZSA2A4G10A	070765	32
ZSA2A4G20A	073300	32
ZSA2A4L25AC1689	086788	32
ZSA2A4S05A	070766	32
ZSA2AG05CC1770	073289	38
ZSA2B2G05A	055410	34
ZSA2B2G05B-C1662	057097	35
ZSA2B2G10A	055411	34
ZSA2B2G10B	057100	36
ZSA2B2G10B-C1662	057098	35
ZSA2B2G15CC1926	072870	35
ZSA2B2G25CC1926	086206	35
ZSA2B4G05A	072961	34
ZSA2B4G10B	070788	36
ZSA2B4G10CC1830	077489	36
ZSA2B4G20B	079870	36
ZSA2B4S05A	085118	34
ZSA2B5G10AC1861	072759	34
ZSB054784	054784	44
ZSB070894	070894	46
ZSB070904	070904	47
ZSB072403	072403	47
ZSB072645	072645	47
ZSB072711	072711	47
ZSB077027	077027	46
ZSB077029	077029	45
ZSB077040	077040	41
ZSB077059	077059	47
ZSB079832	079832	41
ZSB083317	083317	39
ZSB085058	085058	45
ZSB085126	085126	39
ZSB087821	087821	46
ZSB090262	090262	47

Item	Order no.	Page
ZSB090489	090489	48
ZSB092378	092378	39
ZSB096900	096900	39
ZSB100570	100570	45
ZSB103161	103161	39
ZSB2A2G05A	073260	39
ZSB2A2G05C	073264	41
ZSB2A2G10A	073261	39
ZSB2A2G10C	073265	41
ZSB2A2G15A	095612	39
ZSB2A4S06A-C2302	109470	39
ZSB2B4G05A-C2277	106112	39
ZSB2B4G05C-C2044	092996	41
ZSB2B4S22A	109136	39
ZSE2-1	052448	10
ZSE2-2	052449	10
ZSE2-2C1692	070752	10
ZSE2-3	070782	10
ZSE2-4	070762	10
ZSE2-4C1801	091098	11
ZSE2-4C1943	083477	10
ZSG1-2	070793	50
ZSM2100-099714	099714	22
ZSM2100-106103	106103	25
ZSM2100-111594	111594	23
ZSM2101-099715	099715	18
ZSM2101-103126	103126	18
ZSM2200-100697	100697	25
ZSM2200-105308	105308	26
ZSM2200-105362	105362	28
ZSM2200-111914	111914	28
ZSM2200-112033	112033	27
ZSM2300-099716	099716	24
ZSM2300-106374	106374	30
ZSM2300-106670	106670	30
ZSM2300-109971	109971	22
ZSM2300-110338	110338	29
ZSM2300-111462	111462	23
ZSM2300-111871	111871	21
ZSM2300-112803	112803	22
ZSM2300-113290	113290	24
ZSM2301-105075	105075	19
ZSM2301-110317	110317	19
ZSM3100-103462	103462	26
ZSM4200-099713	099713	20
ZSM4200-106104	106104	54
ZSM4200-106105	106105	54
ZSM4201-102059	102059	16
ZSM4204-102966	102966	16
ZSM4204-105645	105645	17
ZSR2A1G05A	055423	42
ZSR2A1G10A	055424	42
ZSR2A1S05A	055425	42
ZSR2A2G05A	055427	42
ZSR2A2G10A	055428	42
ZSR2A2S05A	055429	42
ZSR2A4G05A	097609	42
ZSR2A4S05A	104085	42
ZSR2B2G05A	055431	43
ZSR2B2G10A	055432	43
ZXE-091336	091336	12
ZXE-104833	104833	12
ZXE-111276	111276	12

Item	Order no.	Page

Index by order number

Order no.	Item	Page
002763	BS12	66
002786	BD4	66
002787	SS4	66
043861	Cable socket 6+PE	66
047820	Cable holder	65
052406	Holder, complete	65
052448	ZSE2-1	10
052449	ZSE2-2	10
054784	ZSB054784	44
055402	ZSA2A1G05A	32
055403	ZSA2A1G10A	32
055404	ZSA2A1S05A	32
055406	ZSA2A2G05A	32
055407	ZSA2A2G10A	32
055408	ZSA2A2S05A	32
055410	ZSA2B2G05A	34
055411	ZSA2B2G10A	34
055423	ZSR2A1G05A	42
055424	ZSR2A1G10A	42
055425	ZSR2A1S05A	42
055427	ZSR2A2G05A	42
055428	ZSR2A2G10A	42
055429	ZSR2A2S05A	42
055431	ZSR2B2G05A	43
055432	ZSR2B2G10A	43
057007	ZSA2A2G15A	32
057010	ZSA2A2S05AC1643	32
057089	ZSA2A1L15AC1689	32
057097	ZSA2B2G05B-C1662	35
057098	ZSA2B2G10B-C1662	35
057100	ZSA2B2G10B	36
059340	Magnetic holder	65
070731	ZSA2A2L12CC1725	37
070734	ZSA2-1	59
070735	ZSA2-2	59
070736	ZSA1-3	61
070741	ZSA2A2G05CC1714	38
070750	ZSA1-1	61
070752	ZSE2-2C1692	10
070762	ZSE2-4	10
070764	ZSA2A4G05A	32
070765	ZSA2A4G10A	32
070766	ZSA2A4S05A	32
070782	ZSE2-3	10
070784	ZSA2A3G05A	32
070785	ZSA2A3G10A	32
070786	ZSA2A3S05A	32
070788	ZSA2B4G10B	36
070792	ZSA2-4	59
070793	ZSG1-2	50
070800	ZSA1-2	61
070894	ZSB070894	46
070904	ZSB070904	47
071362	BS12	66
072403	ZSB072403	47
072645	ZSB072645	47
072711	ZSB072711	47
072728	ZSA2A1L25AC1689	32
072759	ZSA2B5G10AC1861	34
072870	ZSA2B2G15CC1926	35
072887	ZSA072887-C1932	40
072961	ZSA2B4G05A	34
072969	ZSA072969C1983	39

Order no.	Item	Page
073260	ZSB2A2G05A	39
073261	ZSB2A2G10A	39
073264	ZSB2A2G05C	41
073265	ZSB2A2G10C	41
073289	ZSA2AG05CC1770	38
073290	Flange connector, 12-pin	67
073291	Blanking plug, complete, 12-pin	67
073293	Blanking plug, 12-pin	67
073294	Plug connector, 12-pin	67
073300	ZSA2A4G20A	32
074384	Flange connector/23-pin/metal version	68
075807	ZSA2A2G20A	32
077027	ZSB077027	46
077029	ZSB077029	45
077040	ZSB077040	41
077059	ZSB077059	47
077489	ZSA2B4G10CC1830	36
077502	Flange connector, 17-pin	67
078939	ZSA2A2G25A	32
079832	ZSB079832	41
079835	BS12	66
079870	ZSA2B4G20B	36
082524	ZSA1A5G05AC1917	51
082557	ZSA1A2L25AC1909	51
083317	ZSB083317	39
083457	Short-circuit plug with chain	68
083477	ZSE2-4C1943	10
083639	Key-operated rotary switch	57
083640	Pushbutton, black	57
084833	Actuator-Z-G-C1932	65
085058	ZSB085058	45
085114	ZSA085114C1968	40
085118	ZSA2B4S05A	34
085126	ZSB085126	39
085648	SD12-M	66
086206	ZSA2B2G25CC1926	35
086681	ZSA086681C1979	40
086707	ZSA086707C1983	39
086721	Cable, 12-core, coiled, 3,900 mm	58
086722	Cable, 12-core, coiled, 5,400 mm	58
086753	Pushbutton, red	57
086754	Pushbutton, green	57
086755	Pushbutton, white	57
086756	Pushbutton, yellow	57
086757	Pushbutton, blue	57
086788	ZSA2A4L25AC1689	32
087379	Cable, 12-core, straight cable, 3,500 mm	58
087380	Cable, 12-core, straight cable, 5,000 mm	58
087381	Cable, 12-core, straight cable, 10,000 mm	58
087382	Cable, 23-core, straight cable, 3,500 mm	58
087383	Cable, 23-core, straight cable, 5,000 mm	58
087384	Cable, 23-core, straight cable, 10,000 mm	58
087408	Cable, 23-core, coiled, 3,900 mm	58
087409	Cable, 23-core, coiled, 5,400 mm	58
087821	ZSB087821	46
090262	ZSB090262	47
090489	ZSB090489	48
091098	ZSE2-4C1801	11
091336	ZXE-091336	12
092141	ZSA092141C2038	36
092141	ZSA2A4G05C-C2032	38
092378	ZSB092378	39
092738	ZSA2A4G05C-C2041	38

Order no.	Item	Page
092996	ZSB2B4G05C-C2044	41
094321	ZSA1A2S05A	51
095144	ZSA1A5G10AC1917	51
095497	ZSA2-4-10C1903	60
095612	ZSB2A2G15A	39
096159	Blanking plug, 17-pin	67
096298	Emergency stop, 16 mm	55
096481	Plug connector, 17-pin	67
096900	ZSB096900	39
097567	ZSA097567C2038	36
097609	ZSR2A4G05A	42
097909	ZSA1A2G07A	51
099371	ZSA2A2G02A	32
099495	ZSA099459C2038	36
099713	ZSM4200-099713	20
099714	ZSM2100-099714	22
099715	ZSM2101-099715	18
099716	ZSM2300-099716	24
100570	ZSB100570	45
100697	ZSM2200-100697	25
100873	ZSA0100873C2038	36
102059	ZSM4201-102059	16
102965	Holder ZSM with magnet	64
102966	ZSM4204-102966	16
102969	Holder ZSM	64
103126	ZSM2101-103126	18
103161	ZSB103161	39
103462	ZSM3100-103462	26
104085	ZSR2A4S05A	42
104231	ZSA1A2G01AC2246	51
104833	ZXE-104833	12
105075	ZSM2301-105075	19
105308	ZSM2200-105308	26
105362	ZSM2200-105362	28
105645	ZSM4204-105645	17
106103	ZSM2100-106103	25
106104	ZSM4200-106104	54
106105	ZSM4200-106105	54
106112	ZSB2B4G05A-C2277	39
106347	LED display, YE 106347	56
106349	Female connector, 17-pin	56
106360	Flange connector, 17-pin	56
106374	ZSM2300-106374	30
106391	Coiled cable with plug connector, 3.9 m	69
106392	Coiled cable with plug connector, 9 m	69
106434	Machine stop, 16 mm	55
106435	ES-XA1E-BV3UU02R	55
106670	ZSM2300-106670	30
109136	ZSB2B4S22A	39
109470	ZSB2A4S06A-C2302	39
109971	ZSM2300-109971	22
110317	ZSM2301-110317	19
110338	ZSM2300-110338	29
111276	ZXE-111276	12
111462	ZSM2300-111462	23
111594	ZSM2100-111594	23
111871	ZSM2300-111871	21
111914	ZSM2200-111914	28
112033	ZSM2200-112033	27
112803	ZSM2300-112803	22
113290	ZSM2300-113290	24
115123	Connection cable for enabling switch ZXE-111276	69

Representatives

International

Australia
Micromax Sensors & Automation
Unit 2, 106-110 Beaconsfield Street
Silverwater, NSW 2128
Tel. +61 2 87482800
Fax +61 2 96482345
info@micromaxsa.com.au

Austria
EUCHNER GmbH
Süddruckgasse 4
2512 Tribuswinkel
Tel. +43 2252 42191
Fax +43 2252 45225
info@euchner.at

Benelux
EUCHNER (BENELUX) BV
Visschersbuurt 23
3356 AE Papendrecht
Tel. +31 78 615-4766
Fax +31 78 615-4311
info@euchner.nl

Brazil
EUCHNER Ltda
Av. Prof. Luiz Ignácio Anhaia Mello,
no. 4387
S. Lucas
São Paulo - SP - Brasil
CEP 03295-000
Tel. +55 11 29182200
Fax +55 11 23010613
euchner@euchner.com.br

Canada
IAC & Associates Inc.
2180 Fasan Drive
Unit A
Oldcastle, Ontario
N0R 1L0
Tel. +1 519 737-0311
Fax +1 519 737-0314
sales@iacnassociates.com

China
EUCHNER (Shanghai)
Trading Co., Ltd.
No. 8 Workshop A, Hi-Tech Zone
503 Meinengda Road Songjiang
201613 Shanghai
Tel. +86 21 5774-7090
Fax +86 21 5774-7599
info@euchner.com.cn

Czech Republic
EUCHNER electric s.r.o.
Videňská 134/102
61900 Brno
Tel. +420 533 443-150
Fax +420 533 443-153
info@euchner.cz

Denmark
Duelco A/S
Systemvej 8
9200 Aalborg SV
Tel. +45 7010 1007
Fax +45 7010 1008
info@duelco.dk

Finland
Sähkölehto Oy
Holkkitie 14
00880 Helsinki
Tel. +358 9 7746420
Fax +358 9 7591071
office@sahkolehto.fi

France
EUCHNER France S.A.R.L.
Parc d'Affaires des Bellevues
Allée Rosa Luxembourg
Bâtiment le Colorado
95610 ERAGNY sur OISE
Tel. +33 1 3909-9090
Fax +33 1 3909-9099
info@euchner.fr

Hong Kong
Imperial
Engineers & Equipment Co. Ltd.
Unit B 12/F
Cheung Lee Industrial Building
9 Cheung Lee Street Chai Wan
Hong Kong
Tel. +852 2889 0292
Fax +852 2889 1814
info@imperial-elec.com

Hungary
EUCHNER Ges.mbH
Magyarországi Fióktelep
2045 Törökbálint
FSD Park 2.
Tel. +36 2342 8374
Fax +36 2342 8375
info@euchner.hu

India
EUCHNER (India) Pvt. Ltd.
401, Bremen Business Center,
City Survey No. 2562,
University Road
Aundh, Pune - 411007
Tel. +91 20 64016384
Fax +91 20 25885148
info@euchner.in

Israel
Ilan & Gavish Automation Service Ltd.
26 Shenkar St. Qiryat Arie 49513
P.O. Box 10118
Petach Tikva 49001
Tel. +972 3 9221824
Fax +972 3 9240761
mail@ilan-gavish.com

Italy
TRITECNICA S.r.l.
Viale Lazio 26
20135 Milano
Tel. +39 02 541941
Fax +39 02 55010474
info@tritecnica.it

Japan
EUCHNER
Representative Office Japan
8-20-24 Kamitsurumahoncho
Minami-ku, Sagamihara-shi
Kanagawa 252-0318
Tel. +81 42 8127767
Fax +81 42 7642708
hayashi@euchner.jp

Solton Co. Ltd.
2-13-7, Shin-Yokohama
Kohoku-ku, Yokohama
Japan 222-0033
Tel. +81 45 471-7711
Fax +81 45 471-7717
sales@solton.co.jp

Korea
EUCHNER Korea Co., Ltd.
RM 810 Daerung Technotown 3rd
#448 Gasang-Dong
Gumcheon-gu, Seoul
Tel. +82 2 2107-3500
Fax +82 2 2107-3999
info@euchner.co.kr

Mexico
SEPIA S.A. de C.V.
Maricopa # 10
302, Col. Napoles.
Del. Benito Juarez
03810 Mexico D.F.
Tel. +52 55 55367787
Fax +52 55 56822347
alazcano@sepia.mx

Poland
ELTRON
Pl. Wolności 7B
50-071 Wrocław
Tel. +48 71 3439755
Fax +48 71 3460225
eltron@eltron.pl

Republic of South Africa
RUBICON
ELECTRICAL DISTRIBUTORS
4 Reith Street, Sidwell
6061 Port Elizabeth
Tel. +27 41 451-4359
Fax +27 41 451-1296
sales@rubiconelectrical.com

Romania
First Electric SRL
Str. Ritmului Nr. 1 Bis
Ap. 2, Sector 2
021675 Bucuresti
Tel. +40 21 2526218
Fax +40 21 3113193
office@firstelectric.ro

Singapore
Sentronics
Automation & Marketing Pte Ltd.
Blk 3, Ang Mo Kio Industrial Park 2A
#05-06
Singapore 568050
Tel. +65 6744 8018
Fax +65 6744 1929
sentronics@pacific.net.sg

Slovakia
EUCHNER electric s.r.o.
Videňská 134/102
61900 Brno
Tel. +420 533 443-150
Fax +420 533 443-153
info@euchner.cz

Slovenia
SMM proizvodni sistemi d.o.o.
Jaskova 18
2000 Maribor
Tel. +386 2 4502326
Fax +386 2 4625160
franc.kit@smm.si

Spain
EUCHNER, S.L.
Gurutzegi 12 - Local 1
Polígono Belartza
20018 San Sebastian
Tel. +34 943 316-760
Fax +34 943 316-405
comercial@euchner.es

Sweden
Censit AB
Box 331
33123 Värnamo
Tel. +46 370 691010
Fax +46 370 18888
info@censit.se

Switzerland
EUCHNER AG
Grofstrasse 17
8887 Mels
Tel. +41 81 720-4590
Fax +41 81 720-4599
info@euchner.ch

Taiwan
Daybreak Int'l (Taiwan) Corp.
3F, No. 124, Chung-Cheng Road
Shihlin 11145, Taipei
Tel. +886 2 8866-1234
Fax +886 2 8866-1239
day111@ms23.hinet.net

Turkey
Entek Otomasyon Urunleri
San.ve Tic.Ltd.Sti.
Perpa Tic.Mer. B Blok
Kat: 11 No:1622 - 1623
34384 Okmeydani / Istanbul
Tel. +90 212 320-2000 / 01
Fax +90 212 320-1188
entekotomasyon@entek.com.tr

United Kingdom
EUCHNER (UK) Ltd.
Unit 2 Petre Drive,
Sheffield
South Yorkshire
S4 7PZ
Tel. +44 114 2560123
Fax +44 114 2425333
info@euchner.co.uk

USA
EUCHNER USA Inc.
6723 Lyons Street
East Syracuse, NY 13057
Tel. +1 315 701-0315
Fax +1 315 701-0319
info@euchner-usa.com

EUCHNER USA Inc.
Detroit Office
130 Hampton Circle
Rochester Hills, MI 48307
Tel. +1 248 537-1092
Fax +1 248 537-1095
info@euchner-usa.com

Germany

Chemnitz
EUCHNER GmbH + Co. KG
Ingenieur- und Vertriebsbüro
Am Vogelherd 2
09627 Bobritzsch
Tel. +49 37325 906000
Fax +49 37325 906004
jens.zehrtner@euchner.de

Düsseldorf
EUCHNER GmbH + Co. KG
Ingenieur- und Vertriebsbüro
Sundernholz 24
45134 Essen
Tel. +49 201 43083-93
Fax +49 201 43083-94
juergen.eumann@euchner.de

Essen/Dortmund
Thomas Kreißl
fördern - steuern - regeln
Hackenberghang 8a
45133 Essen
Tel. +49 201 84266-0
Fax +49 201 84266-66
info@kreissl-essen.de

Wiesbaden
EUCHNER GmbH + Co. KG
Ingenieur- und Vertriebsbüro
Schiersteiner Straße 28
65187 Wiesbaden
Tel. +49 611 98817644
Fax +49 611 98895071
giancarlo.pasquesi@euchner.de

Freiburg
EUCHNER GmbH + Co. KG
Ingenieur- und Vertriebsbüro
Steige 5
79206 Breisach
Tel. +49 7664 4038-33
Fax +49 7664 4038-34
peter.seifert@euchner.de

Hamburg
EUCHNER GmbH + Co. KG
Ingenieur- und Vertriebsbüro
Bleickenallee 13
22763 Hamburg
Tel. +49 40 636740-57
Fax +49 40 636740-58
volker.behrens@euchner.de

Magdeburg
EUCHNER GmbH + Co. KG
Ingenieur- und Vertriebsbüro
Tismartraße 10
39108 Magdeburg
Tel. +49 391 736279-22
Fax +49 391 736279-23
bernhard.scholz@euchner.de

München
EUCHNER GmbH + Co. KG
Ingenieur- und Vertriebsbüro
Obere Bahnhofstraße 6
82110 Germering
Tel. +49 89 800846-85
Fax +49 89 800846-90
st.kornes@euchner.de

Nürnberg
EUCHNER GmbH + Co. KG
Ingenieur- und Vertriebsbüro
Steiner Straße 22a
90522 Oberasbach
Tel. +49 911 669-3829
Fax +49 911 669-6722
ralf.paulus@euchner.de

Stuttgart
EUCHNER GmbH + Co. KG
Ingenieur- und Vertriebsbüro
Kohlhammerstraße 16
70771 Leinfelden-Echterdingen
Tel. +49 711 7597-0
Fax +49 711 7597-303
oliver.laier@euchner.de
uwe.kupka@euchner.de

01/13

EUCHNER

More than safety.

Support hotline

You have technical questions about our products or how they can be used?
For further questions please contact your local sales representative.

Comprehensive download area

You are looking for more information about our products?
You can simply and quickly download operating instructions, CAD or ePLAN data and accompanying software for our products at www.euchner.com.

Customer-specific solutions

You need a specific solution or have a special requirement?
Please contact us. We can manufacture your custom product even in small quantities.

EUCHNER near you

You are looking for a contact at your location? Along with the headquarters in Leinfelden-Echterdingen, the worldwide sales network includes 14 subsidiaries and numerous representatives in Germany and abroad – you will definitely also find us near you.

www.euchner.com

EUCHNER GmbH + Co. KG
Kohlhammerstraße 16
70771 Leinfelden-Echterdingen
Germany
Tel. +49 711 7597-0
Fax +49 711 753316
info@euchner.de
www.euchner.com

095690-07-11/12 Subject to technical modifications without notice, no liability will be assumed for any detail. © EUCHNER GmbH + Co. KG · TA

EUCHNER
More than safety.